1. Design Criteria

1.1. Governing Building Code ..... 2018 International Building Code (IBC)
A. Risk Category II

1.2. Floor Live Loading
A. Mechanical area ..... Actual weights

1.3. Roof Live Loading (Canopies)
A. Roof Live Load ..... 20 psf
B. Roof Snow Load ..... 23.4 psf + Drift per IBC
1. Ground Snow Load, P_g ..... 31 psf
2. Snow Exposure Factor, C_e 1.0
3. Importance Factor, I_s 1.0
4. Thermal Factor, C_t 1.2
5. Slope Factor, C_s 1.0
C. Roof Rain Load Intensity
1. 15-min duration/100-year return period, I_{15} ..... 1.02 in. per hour
2. 60-min duration/100-year return period, I_{60} ..... 1.70 in. per hour

1.4. Earthquake
A. Seismic Design Category ..... D
B. Spectral Response Accelerations
S_S = 1.330 g S_{DS} = 1.064 g
S_1 = 0.488 g
C. Importance Factor, I_E 1.0
D. Analysis Procedure ..... Equivalent Lateral Force (Static)
E. Canopies, Fp coefficient .....
F. Screen wall, Fp coefficient .....

1.5. Wind
A. Basic Design Wind Speed, V ..... 102 mph
B. Velocity pressure exponent coefficient, K_d 0.85
C. Ground elevation factor, K_e 0.85
D. Exposure category C
E. Internal Pressure Coefficient, GC_{pi} 0.18
F. Topographic Factor, K_{zt} 1.0

1.6. Foundation
A. Design based upon presumptive load bearing values IBC Table 18006.2 for clay, sandy clay, clayey silt, silt, and sandy silt soil material.
1. Soil Bearing Pressure: ..... 1500 psf on compacted fill.

2. Earthwork

2.1. Proof rolling: The natural undisturbed soil below all footings shall be proof rolled prior to placing concrete. Remove all soft spots and replace with compacted structural fill.

2.2. Compacted structural fill: Structural fill shall be provided at all locations and extents described by the TYPICAL COMPACTED STRUCTURAL FILL DETAIL. All fill material shall be a well-graded granular material with a maximum size less than 4 inches and with not more than 10 percent passing a No. 200 sieve. It shall be compacted to 95 percent of the maximum laboratory density as determined by ASTM D1557. All fill shall be tested (See Specifications and the Quality Assurance section of the GSN).

2.3. It shall be the responsibility of the Contractor to brace and shore excavations as required.

3. Concrete

3.1. Materials shall comply with the Standards specified in American Concrete Institute (ACI) 318-14, "Building Code Requirements for Structural Concrete."
A. Concrete mix design requirements shall be as follows:

Location	f'c at 28 days (psi)	Max W/C Ratio	Air Content (%)	Max Aggregate Size	Exposure Classes* F	S	C
Footings	3000	0.50	-	1"	F0	S0	C0
Exterior Walls	4500	0.45	6	¾"	F1	S0	C1
All other site cast concrete	4500	0.45	6	1"	F1	S0	C1

* Exposure Classes are per ACI 318, Section 19.3.1.1, where F, S and C are exposure categories for freezing and thawing, sulfate, and corrosion protection of reinforcement, respectively.

B. Cementitious Materials:
1. Portland Cement (ASTM C150):
a. Type I or II for exposure class S0.
b. Type II or V for exposure class S1.
c. Type V for exposure class S2 and S3.
2. Fly Ash (ASTM C618, Class C or F): maximum fly ash content as a percentage of total weight of cementitious materials shall be 25 percent.
C. Concrete Density (Maximum Air Dry Weight):
1. Normal weight concrete shall be approximately 145 to 155 pounds per cubic foot. Aggregate shall be ASTM C33.
D. Steel Reinforcement:
1. ASTM A615 Grade 60, fy = 60,000 psi min. unless noted otherwise.
E. Wire Reinforcement:
1. Welded wire fabric (WWF): ASTM A1064.
F. Admixtures:
1. Air-entraining admixtures, comply with ASTM C 260 (when used).
a. Tolerance on air content as delivered shall be +/- 1.5%.
b. When air content of a trowel finished floor slab exceeds 3%, there is an increased risk for delaminations and blistering to occur. When this situation is present, the Contractor shall pay special attention to the finishing procedures to help minimize such risks. Refer to ACI 302.1R-15 "Guide for Concrete Floor and Slab Construction" for proper finishing guidelines.
2. The use of super plasticizers and water reducers is allowed, but not required.
3. Calcium chloride or admixtures containing calcium chloride shall not be added to the concrete mix.
G. Chloride Ion: Maximum water soluble chloride ion concentrations in hardened concrete at age between 28 and 42 days contributed from the ingredients including water, aggregates, cementitious materials, and admixtures shall not exceed a maximum, by weight of cement, of 1.00% for concrete with exposure class C0, 0.30% for concrete with exposure class C1, 0.15% for concrete with exposure class C2, and 0.06% for all prestressed concrete.
H. Slump Limit: 4 inches, maximum for all concrete prior to the addition of plasticizers and water reducing admixtures. The concrete supplier shall indicate the final slump of each concrete mix in the submitted mix design.
I. Only one grade or type of concrete shall be poured on the site at any given time.

3.2. Formwork shall comply with ACI Standards Publication 347 and the project specifications. The Contractor shall be responsible for the design, detailing, care, placement and removal of the formwork and shores.
A. Pre-camber forms and screeds with a camber of 1/4" per every 10'-0" of span to compensate for dead load deflection, unless noted otherwise. Post tensioned concrete slabs and beams do not require formwork to be pre-cambered.

3.3. Concrete cover requirements for deformed bar reinforcing steel shall comply with ACI 318, "Building Code Requirements for Structural Concrete".
A. Cast-in-place Concrete: Specified Cover
1. Cast against and permanently exposed to earth: .....3"
2. Formed concrete exposed to earth or weather:
#6 thru #18 bars.....2"
#5 and smaller bars.....1.1/2"
3. Concrete not exposed to weather or in contact with ground:
Slabs, Walls, Joists; #11 bars and smaller.....3/4"
Beams, Columns: primary reinforcement, ties, stirrups, spirals .....1.1/2"

3.4. Construction Joints and Control Joints:
A. Provide a surface intentionally roughened to ¼" amplitude in all wall footings. A continuous keyway shall not be used for concrete shear wall to footing connections, unless specifically indicated. Refer to project plans, schedules and details for the shear wall to footing connection requirements.
B. All horizontal and vertical construction joints shall have a surface intentionally roughened to ¼" amplitude. A continuous 2 X 4 keyway may be used on elements other than shear walls.
C. Provide reinforcement dowels to match the member reinforcement across the joint, unless noted otherwise. For dowels across construction joints and wall to footing connections of concrete shear walls, refer to specific project plans, schedules, and details.
D. Slabs on grade shall have construction or control joints spaced not to exceed 30 times the slab thickness in any direction.
E. Control joints shall be installed in slabs on grade so the length to width ratio of the slab is no more than 1.25:1. Control joints shall be completed within 12 hours of concrete placement. See typical details for joint configuration.
F. Control joints in visually exposed walls, unless noted otherwise: (Joints shall line up with masonry and architectural joints, see drawings.)
1. Vertical control joints at 10'-0" on center.
2. Reinforcing shall be continuous through control and construction joints, unless noted otherwise.
3. Control joints in concrete foundation walls shall line up with masonry control joints.

3.5. Detailing: All reinforcing, including welded wire fabric, shall be detailed, bolstered & supported to comply with ACI 315, "Details and Detailing of Concrete Reinforcement" and the Concrete Reinforcing Steel Institute (CRSI) recommendations. Reinforcing bars shall not be welded unless specifically shown on drawings.
A. All reinforcing shall be developed in compliance with the CONCRETE REINFORCING BAR DEVELOPMENT AND LAP SPLICE SCHEDULE. As indicated in the drawings or upon approval of the engineer of record, standard tension hooks or headed bars described by the TENSION HOOK DEVELOPMENT SCHEDULE or the TENSION HEADED BAR DEVELOPMENT SCHEDULE may be used in lieu of straight bars.
B. All embedded elements and dowels shall be securely tied to formwork or to adjacent reinforcing prior to the placement of concrete.
C. Use chairs or other support devices recommended by CRSI to support and tie reinforcement bars and welded wire fabric prior to placing concrete. Welded wire fabric shall be continuously supported at 36" o.c. maximum.
D. See typical details for reinforcing at wall intersections and ends, reinforcing around wall openings and suspended slab openings, vertical wall dowels, concrete column ties and splices in vertical column reinforcing.
E. Where required, reinforcement is to be terminated in a standard hook or headed bar anchor. Refer to the TENSION HOOK DEVELOPMENT SCHEDULE, the TENSION HEADED BAR DEVELOPMENT SCHEDULE and the REINFORCEMENT END HOOK SCHEDULE as appropriate. Unless otherwise noted, a standard hook or headed bar are equivalent and may be substituted at the Contractor's option.
F. Contractor shall coordinate placement of all openings, curbs, dowels, sleeves, conduits, bolts, inserts and other embedded items prior to concrete placement.
G. All reinforcement shall be bent cold, and shall be bent only once at the same location. All reinforcement shall be shop bent, unless otherwise permitted by the Engineer.

3.6. Minimum Reinforcing: Wall reinforcing shall be as follows, unless noted otherwise:

Wall Thickness	Horizontal Reinforcing	Vertical Reinforcing
6"	#4 @ 13" o.c.	#4 @ 18" o.c.
8"	#5 @ 15" o.c.	#4 @ 16" o.c.
10"	#5 @ 12" o.c.	#4 @ 13" o.c.
12"	#4 @ 13" o.c. Each Face	#4 @ 18" o.c. Each Face
Others	0.25% of Wall Area	0.15% of Wall Area

Spacing shall exceed neither three times the wall thickness nor 18". In addition to the above reinforcing, 2 - #5 x continuous horizontal bars shall be placed at the bottom of the wall (near the footing) and at each floor level, at the roof level and at the top of wall.

3.7. No aluminum conduit or product containing aluminum or any other material injurious to concrete shall be embedded in concrete.

3.8. Unless otherwise noted, all slabs on grade shall be 4" thick.

4. Masonry

4.1. Materials shall comply with the Standards specified in TMS 402-16 and TMS 602-16, "Building Code Requirements and Specification for Masonry Structures."
A. Materials, unless noted otherwise:
1. Hollow Clay Units: Hollow Brick, ASTM C652, Grade SW.
2. Material Strength: The Prism Test Method or the Unit Strength Method according to TMS 602-16 Section 1.4B may be used to determine the compressive strength of masonry assemblies. The contractor shall select the desired method and meet the required material strengths as follows:
a. Prism Test Method, TMS 602-16 Section 1.4B.3:
1) Hollow Clay Unit Assembly, f'm = 2500 psi.
b. Unit Strength Method, TMS 602-16 Section 1.4B.2:
1) Hollow Clay Units, minimum unit strength of 6600 psi average or better. (f'm = 2500 psi)
2)
3. Mortar: Use Type "S" according to ASTM C270, proportion specification. Admixtures shall not be added to the mortar mix.
4. Grout: For masonry assemblies with f'm = 2,000 psi or less conform to ASTM C476, proportion specification. Grout does not meet the requirements of ASTM C476 proportion specification or that is used in masonry assemblies with f'm > 2,000 psi shall meet the following requirements: Meet the material requirements of ASTM C476, obtain a minimum compressive strength of f'm or 2,000 psi, whichever is larger, at 28 days tested according to ASTM C1019, and a slump of 8 in. to 11 in. as determined by ASTM C143.
a. Self-Consolidating Grout: Conform to the material requirements of ASTM C476, obtain a minimum compressive strength of f'm or 2,000 psi, whichever is larger, at 28 days tested according to ASTM C1019, obtain a slump flow of 24 in. to 30 in. as determined by ASTM C1611, and shall have a Visual Stability Index less than or equal to 1 as determined in accordance with ASTM C1611 Appendix X.1. Field addition of admixtures is not permitted.
5. Reinforcing: Grade 60 reinforcing steel shall comply with ASTM A615. Wire joint reinforcing shall comply with ASTM A951.
6. Deformed Bar Anchors (DBA): All DBAs shall comply with ASTM A496.
7. Anchor Bolts (AB): ASTM A307 with ASTM A563 heavy hex nuts and hardened washers, Grade A, unless noted otherwise.
8. Headed Stud Anchors (HSA): Manufacture all HSAs in conformance with ASTM A108 with dimensions complying with AISC specifications.

4.2. Construction Requirements:
A. Mortar Joints: Joints shall be "concave", "V-joint" or "weathered raked" for structural members unless noted otherwise on architectural drawings.
B. Masonry walls, beams and columns shall be constructed with running bond, unless noted otherwise.
C. Grouting Requirements: Comply with IBC Section 2104 and TMS 602 Section 3.5. Grout shall be mechanically consolidated and mechanically reconsolidated according to TMS 602 Section 3.5 E.
1. Grout Pour Heights that exceed 4 feet shall meet the following requirements:
a. Provide cleanouts in the bottom course of masonry for each grout pour in accordance with TMS 602 Section 3.2.F.
b. For grout other than Self Consolidating Grout a demonstration panel representative of the proposed wall construction and construction procedures shall be provided and approved by the Architect. The demonstration panel may be a part of the completed construction as approved by the Architect.
c. For Self-Consolidating Grout placed in masonry that has cured for at least 4 hours, place in lifts not exceeding the Maximum Grout Pour Height in listed in TMS 602 Section 3.5C.
2. When grouting, form grout keys between grout pours. Form grout keys between grout lifts when the first lift is permitted to set prior to placement of the subsequent lift.
a. Form a grout key by terminating the grout a minimum of 1.1/2 in. below a mortar joint.
b. Do not form grout keys within beams.
c. At beams or lintels laid with closed bottom units, terminate the grout pour at the bottom of the beam or lintel without forming a grout key.
D. Reinforcing Bars shall not be welded unless specifically shown on drawings. In such cases, use only AWS standards. Do not substitute reinforcing bars for DBAs or HSAs.
E. Control Joints: Space at 40'-0" or 1.5 times wall height, whichever is less. Joints shall not be located over masonry openings, and shall be a minimum of the schedule masonry column width away from masonry openings. See architectural drawings for locations.
F. Grout all beam and joist pockets solid after installation of beams and joists.
G. Masonry Veneer Attachment and Reinforcing:
1. Steel Lintels: Provide steel angle lintels at all openings through the masonry veneer. Provide one inch of bearing for each foot of width of opening, with a minimum bearing of six inches. See the Steel Angle Lintel Schedule for size.

4.3. Detailing Requirements:
A. Standards: Reinforcing detailing shall comply with American Concrete Institute (ACI) Standard 315, "Details and Detailing of Concrete Reinforcement."
B. Reinforcement Protection (cover):
1. Joint reinforcement shall have not less than 5/8" mortar coverage from the exposed face.
2. Other reinforcement shall have a minimum coverage of one bar diameter over all the bars, but not less than 3/4". When masonry is exposed to soil, minimum coverage shall be 1.5".
C. Vertical steel reinforcement shall be placed and secured against displacement prior to grouting by wire positioners or other suitable devices: at intervals not exceeding the least dimension of the grout lift height, or bar splice locations, or 64". Vertical reinforcing shall be located at the center of the wall, unless noted otherwise.
D. Lap Splice Lengths: Lap all masonry reinforcing bars per the "Masonry Reinforcing Bar Lap Splice Schedule." Joint reinforcement shall lap a minimum of 6".
E. Corner Bars: Horizontal reinforcement shall be continuous at all corners and at intersecting walls. Provide corner bars with required lap splice length.
F. Dowels: All vertical reinforcing shall be doweled to the foundation wall, footing (structure below) and to the structure above with the same size dowel, spacing (and in the same core) as the vertical wall reinforcing unless noted otherwise.
G. Horizontal wall reinforcing shall be continuous through joining concrete walls, masonry walls, columns, and pilasters. Provide a key between the wall and the column or pilaster. Horizontal wall reinforcing shall be placed inside the column vertical reinforcing.
H. Anchor bolts and headed stud anchors shall be set in a grouted cell. Anchor bolts and headed stud anchors shall have 1" grout surrounding the shank at its penetration. Grout shall be flush with the face or top of the masonry.
I. The exposed face of all embed plates shall be set flush with the face of masonry wall or column.

5. Structural Steel

5.1. Material:
A. W-Shapes: ASTM A992, (F_y = 50 ksi), except as noted otherwise
B. All Other Shapes and Plates: ASTM A36 (Fy = 36 ksi), except as noted otherwise
C. Rectangular and Square Hollow Structural Sections (HSS): ASTM A500, Grade C (Fy = 50 ksi)
D. High-Strength Bolts:
1. Group A: ASTM F3125 Grades A325 & F1852
2. Group B: ASTM F3125 Grades A490 & F2280
3. Group C: ASTM F3043 & ASTM F3111
E. Headed Stud Anchors (HSA): ASTM A108, with dimensions complying with AISC specifications
F. Anchor Rods: ASTM F1554, Grade 36, unless noted otherwise, with ASTM A563 heavy hex nuts and ASTM F436 hardened washers

5.2. Fabrication and construction shall comply with the following Codes and Standards:
A. American Institute of Steel Construction (AISC) 360-16, "Specification for Structural Steel Buildings"
B. AISC 303-16, "Code of Standard Practice for Steel Buildings and Bridges" excluding the following: Section 3.3 (last two sentences of first paragraph), Section 4.4, Section 4.4.1, Section 4.4.2, Section 4.5, and Section 7.13.3
1. The architectural drawings are the prime contract drawings. Consultants' drawings by other disciplines are supplementary to the architectural drawings. The structural drawings shall be used in conjunction with the architectural drawings. Detailing and shop drawing production for structural elements will require information (including dimensions) contained in architectural, structural, and/or other consultants' drawings. Refer to the Special Instructions section of the general notes, below.
C. AISC/RCSC 2014, "Specification for Structural Joints Using High-Strength Bolts"
D. American Welding Society (AWS) D1.1:2015, "Structural Welding Code – Steel" (specific items do not apply when they conflict with the AISC requirements)
E. American Welding Society (AWS) D1.8:2016, "Structural Welding Code – Seismic Supplement" (specific items do not apply when they conflict with the AISC requirements)

5.3. Structural shapes and plates shall be fabricated from newly rolled (milled) one-piece sections without splices, unless specifically noted otherwise on the structural drawings. Connections for structural steel shall comply with the structural drawings, unless written approval is given by the Structural Engineer.

5.4. Welding:
A. It is recommended the steel erection contractor and steel fabricator contact the Quality Assurance Agency prior to beginning any welds. A program of joint preparation and welding procedures should be worked out between the two parties before the welding is started so that correct welds will be made from the beginning.
B. Certification of Welders: All shop and field welding shall be executed by AWS certified welders who have been specifically certified for the process of welding being performed. The welder's certification will be considered as being current unless the welder is not engaged in the process of welding being performed for a period exceeding six months or there is a specific reason to question a welder's ability as required by AWS. Certification and records must comply with AWS Standards. Certification and appropriate records must be provided to the Architect prior to beginning work.
C. Electrodes: E-70 XX or as noted otherwise. E60 XX may be used for welding steel floor and roof decks.
D. Minimum Welds: All intersecting steel shapes that are not bolted shall be connected by a fillet weld all around, unless noted otherwise. Fillet weld sizes that are not shown shall be 1/16" less than the thinnest of the connected parts for thicknesses 1/4" and larger. Fillet welds on plates less than 1/4" shall be of the same size as the thinnest of the connected parts.
E. Reinforcing Bars: Do not weld rebar except as specifically detailed in the drawings. In such cases, use only AWS standards. Do not substitute reinforcing bars for deformed bar anchors (DBAs), machine bolts, or headed stud anchors (HSAs).
F. Bolts: Do not apply any welds, including "tack" welds to bolts, including anchor bolts, except as specifically detailed in the drawings.
G. Headed Stud Anchor (HSA) welding and Deformed Bar Anchor (DBA) welding shall conform to the manufacturer's specifications. Welding shall comply with AWS D1.1 Section 7.6 through 7.9 and Annex G.

5.5. Bolted Connections:
A. Provide snug tightened joints with Group A (threads not excluded) bolts for steel to steel connections, unless noted otherwise. Snug tightened joints shall be used in connections for simple span framing and beam (or girder) to bearing plate connections. Snug tight is the condition that exists when all of the plies in a connection have been pulled into firm contact by the bolts in the joint and all of the bolts in the joint have been tightened sufficiently to prevent the removal of the nuts without the use of a wrench. The snug tightened condition is typically achieved with a few impacts of an impact wrench, application of an electric torque wrench until the wrench begins to slow, or the full effort of a worker on an ordinary spud wrench.
B. Provide hardened washers beneath the turned element of all bolts or nuts. Provide hardened beveled washers, to compensate for the lack of parallelism, where the outer face of the bolted parts has a slope greater than one in twenty with respect to the plane normal to the bolt axis. Hardened washers or plates installed over oversized holes or slotted holes shall be at least 5/16" thick and shall conform to ASTM F436. Plates or bars installed at slotted holes shall have a size sufficient to completely cover the slot after installation.
C. Where a steel to steel beam connection is not detailed in the drawings, provide a standard AISC framed connection with the capacity to support one half of the total uniform load capacity of the given shape for the span and for the steel specified.
D. Bolts, nuts, and washers shall not be reused.

5.6. Steel Lintels
A. Provide steel angle lintels at all openings through the masonry veneer. Provide one inch of bearing for each foot of width of opening, with a minimum bearing of six inches. See the STEEL ANGLE LINTEL SCHEDULE for size.

6. Cold-Formed Steel

6.1. Material:
A. Studs:
1. Base metal thickness of less than 54 mil: ASTM A1003 or A653, Fy = 33 ksi.
2. Base metal thickness of 54 mil or greater: ASTM A1003 or A653, Fy = 50 ksi.
B. Track, Connection Clips, and Miscellaneous Shapes:
1. Base metal thickness of less than 54 mil: A1003 or A653. Fy = 33 ksi.
2. Base metal thickness of 54 mil or greater: A1003 or A653, Fy = 50 ksi

6.2. Design, fabrication and construction shall comply with the following Codes and Standards:
A. American Iron and Steel Institute (AISI) S100-16, "North American Specification for the Design of Cold-Formed Steel Structural Members", dated 2016.
B. American Iron and Steel Institute (AISI) S202-15: Code of Standard Practice for Cold-formed Steel Framing, 2015
C. American Iron and Steel Institute (AISI) S220-15, "North American Standard for Cold-Formed Steel Framing-Nonstructural Members."
D. American Iron and Steel Institute (AISI) S240-15: North American Standard for Cold-Formed Steel Structural Framing
E. American Iron and Steel Institute (AISI) S400-15/S1-16: North American Standard for Seismic Design of Cold-formed Steel Structural Systems, 2015, with Supplement 1, dated 2016.

6.3. Non-Load-Bearing Exterior Cold-Formed Steel Framing:
A. All non-load bearing exterior cold-formed steel (and/or) joist framing members along with all runner, bridging, and end track shall be of the designation shown on the plans, schedules, and details. The framing member designators used in the plans, schedules, and details follow the convention established by the Steel Stud Manufacturers' Association (SSMA) and the North American Steel Framing Alliance (NASFA). Framing members provided shall comply with the designations according to this convention. See Steel Stud Manufacturers Association- Nomenclature for an explanation of the stud or track designations.
B. All components shall be galvanized.
C. Where not noted in the drawings, all framing members shall have a base metal thickness of 33 mil or greater.
D. All jamb, header, and sill components shall be continuous without splices unless noted otherwise. Jambs shall extend continuous from floor to floor, roof, or wind girt.
E. Web punchouts in header stud members shall not be located within 12 inches of the support.
F. Fasteners for steel stud construction shall be self-drilling and self-tapping meeting ASTM C1513. Screw-type fasteners shall penetrate the joined materials with a minimum of three threads exposed. Furnish, install, and tighten screws per the manufacturer's recommendations and per the sizes indicated in the details. The minimum screw-type fastener size shall be #10 for any connection, unless noted otherwise, or the manufacturers' minimum recommended size for framing clips and bridging.

6.4. Welding:
A. The steel stud contractor shall contact the Quality Assurance Agency prior to beginning any welds. A program of joint preparation and welding procedures should be worked out between the two parties before the welding is started so that correct welds will be made from the beginning.
B. Certification of Welders: All shop and field welding shall be executed by AWS certified welders who have been specifically certified for the process of welding being performed. The welder's certification will be considered as being current unless the welder is not engaged in the process of welding being performed for a period exceeding six months or there is a specific reason to question a welder's ability as required by AWS. Certification and records must comply with AWS Standards. Certification and appropriate records must be provided to the Architect prior to beginning work.
C. Unless noted otherwise, all welded connections shall be done using 1/8" AWS type 6013 or 7014 rod with a welding heat of 60-110 amperes depending on the gauge of material and the fit of the parts. Wire tying of framing components shall not be permitted. Welds and damaged coatings on studs shall be repaired with zinc galvanizing repair paint.

7. Miscellaneous

7.1. Post-Installed Anchors in Concrete and Masonry
A. Anchorage to hardened concrete and grout-filled masonry shall include all mechanical and adhesive anchors and epoxy doweled reinforcing bars of size, quantity, spacing, and embedment as shown on the drawings. Additional anchors shall not be used without approval from the Engineer prior to installation.
B. Special inspection is required during the installation of all post-installed anchors. Refer to applicable code evaluation reports and the Quality Assurance and Statement of Special Inspections sections of the General Structural Notes.
C. Anchorage to Concrete:
1. All post-installed anchors into hardened concrete shall be selected from the following pre-approved products, unless noted otherwise:

Steel Screw Anchor	Evaluation Report
Hilti KWIK HUS-EZ	ICC ESR-3027
DeWalt Screw-Bolt+	ICC ESR-3889
Simpson Titen HD	ICC ESR-2713

Steel Expansion/Wedge Anchor	Evaluation Report
Hilti KWIK Bolt TZ	ICC ESR-1917
DeWalt Power-Stud+ SD2	ICC ESR-2502
Simpson Strong-Bolt 2	ICC ESR-3037

Adhesive Anchor System	Evaluation Report
Hilti HIT-HY 200	ICC ESR-3187
Hilti HIT-RE 500 V3	ICC ESR-3814
DeWalt AC200+	ICC ESR-4027
DeWalt Pure 110+	ICC ESR-3298
Simpson SET-3G	ICC ESR-4057

2. Adhesive anchors shall be installed into concrete having a minimum age of 21 days. For installations sooner than 21 days, consult the adhesive manufacturer.
D. Anchorage to Masonry:
1. All post-installed anchors into grout-filled masonry shall be selected from the following pre-approved products, unless noted otherwise:

Steel Screw Anchor	Evaluation Report
Hilti KWIK HUS-EZ	ICC ESR-3056
DeWalt Screw-Bolt+	ICC ESR-4042
Simpson Titen HD	ICC ESR-1056

Steel Expansion/Wedge Anchor	Evaluation Report
Hilti KWIK Bolt TZ	ICC ESR-3785
DeWalt Power-Stud+ SD1	ICC ESR-2966
Simpson Wedge-All	ICC ESR-1396

Adhesive Anchor System	Evaluation Report
Hilti HIT-HY 270	ICC ESR-4143
DeWalt AC100+ Gold	ICC ESR-3200

E. Alternate anchors or adhesives are permitted with approval of the Engineer. The Contractor shall submit the proposed anchor product data and code evaluation report demonstrating the anchor is equivalent to or exceeds the capacity of the specified anchor.
F. Installation of adhesive anchors horizontally or upwardly inclined to support sustained tension loads shall be performed by personnel certified by an applicable certification program. Certification shall include written and performance tests in accordance with the ACI/CRSI Adhesive Anchor Installer Certification program, or equivalent. Proof of current certification shall be submitted to the Engineer for approval prior to commencement of installation.
G. Anchors shall be installed according to the Manufacturer's Printed Installation Instructions and applicable code evaluation reports including:
1. Hole diameter, depth, and cleaning procedure
2. Adhesive mixing, preparation, and placement
3. Installation torque
H. Locate all existing reinforcement and embedded items prior to drilling into concrete or masonry elements. Do not damage rebar or embeds while drilling or installing anchors.
I. Grout all defective or abandoned holes with non-shrink grout or an injectable epoxy adhesive matching the surrounding concrete compressive strength. Consult the Architect for additional requirements at architecturally exposed concrete.
J. Drilled anchors are not allowed in post-tensioned concrete without approval of the Architect and Engineer.
K. Carbon steel anchors are limited to use in dry, interior locations.
L. Holes for post-installed anchors may not be core drilled unless specifically allowed by the manufacturer's installation instructions and the code evaluation report.

8. Special Instructions

8.1. The project specifications are not superseded by the General Structural Notes but are intended to be complementary to them. Consult the specifications for additional requirements in each section. Notes and specific details on the drawings shall take precedence over General Structural Notes and typical details.

8.2. The architectural drawings are the prime contract drawings. Consultant drawings by other disciplines are supplementary to the architectural drawings. All omissions or conflicts, including dimensions, between the various elements of the consultants' drawings and/or specifications shall be brought to the attention of the Architect before proceeding with any work involved. In case of conflict, follow the most stringent requirement as directed by the Architect without additional cost to the Owner. Any work done by the Contractor after discovery of such discrepancy shall be done at the Contractor's risk.

8.3. The structural drawings shall be used in conjunction with the architectural drawings. Primary structural elements and overall structural layout are indicated within the structural plans and details. Some secondary elements, architectural layouts, alcoves, elevations, slopes, depressions, curbs, mechanical equipment and electrical equipment, are not indicated within the structural drawings. Detailing and shop drawing production for structural elements will require information (including dimensions) contained in the architectural, structural and/or other consultants' drawings.

8.4. Shoring and Bracing Requirements:
A. Canopy Structures -- The General Contractor is responsible for the method and sequence of all structural erection. The Contractor shall provide temporary shoring and bracing as the method of erection requires to provide adequate vertical and lateral support. Shoring and bracing shall remain in place as the chosen method requires until all permanent members are in place and all final connections are completed, including all roof and floor attachments. The building shall not be considered stable until all connections are complete.
B. Walls above grade shall be braced until the structural system is complete. Walls shall not be considered to be self-supporting.

8.5. All expansion joints (E.J.) shown in the structural drawings shall be considered seismic separation joints, unless noted otherwise.

8.6. Submittals: A copy of all shop drawings that have been submitted for review must be kept at the construction site for reference. These drawings must bear the appropriate review stamps. The shop drawing review shall not relieve the Contractor of the responsibility of completing the project according to the contract documents. The General Contractor shall review and mark all shop drawings prior to submitting them to the Architect for review. Shop Drawings made from reproductions of (these) contract drawings will be rejected.

8.7. Project Coordination: It shall be the responsibility of the General Contractor to coordinate with all trades any and all items that are to be integrated into the structural system. Openings or penetrations through, or attachments to the structural system that are not indicated on these drawings shall be the responsibility of the General Contractor and shall be coordinated with the Architect/Engineers. The order of construction is the responsibility of the General Contractor. It is the Contractor's obligation to provide all items necessary for the chosen procedure.

8.8. Contractor shall field verify all dimensions, and conditions. If the contract drawings do not represent actual conditions, Contractor shall notify Architect/Engineer prior to fabrication or construction within that area.

8.9. Notice of Copyright: The structural drawings, plans, schedules, notes and details are hereby copyrighted by Reaveley Engineers. Submission or distribution of documents to meet official regulatory requirements or for similar purposes in connection with the project is not to be construed as publication in derogation of Reaveley Engineers' reserved rights. The documents defining the structure are instruments of service prepared by Reaveley Engineers for one use only. Furthermore, these documents shall not be reproduced, or copied, in whole or in part by the Contractor or subcontractors for preparation of shop drawings or other submittals.

9. Quality Assurance

9.1. Quality Assurance Agency Requirements:
A. The Owner shall engage a qualified Quality Assurance Agency (QAA) to provide all special inspection and quality assurance testing for the project. The QAA shall provide all information necessary for the building official to determine that the agency meets the applicable requirements.
1. The QAA shall be objective, competent and independent from the Contractor responsible for the work being inspected. The agency shall disclose to the building official and the registered design professional in responsible charge possible conflicts of interest so that objectivity can be confirmed.
2. The QAA shall have adequate equipment to perform required tests. The equipment shall be periodically calibrated.
3. The QAA shall employ experienced personnel educated in conducting, supervising and evaluating tests and special inspections. Experience or training shall be considered relevant where the documented experience or training is related in complexity to the same type of special inspection or testing activities for projects of similar complexity and material qualities.
4. The QAA shall send copies of all inspection and testing reports to the building official, Owner, Architect, Engineer and Contractor. Reports shall indicate that the work inspected was or was not completed in conformance to the approved construction documents. Discrepancies shall be brought to the immediate attention of the Contractor for correction. If they are not corrected, the discrepancies shall be brought to the attention of the, Architect and Engineer.
5. The QAA shall submit a final report documenting required special inspections and tests, and correction of any discrepancies noted in the inspections or tests. The final report shall be distributed to the building official, Owner, Architect and Engineer in a timely manner prior to the completion of the project.

9.2. Contractor Responsibilities:
A. The Contractor shall submit a written statement of responsibility to the building official and the Owner or the owner's authorized agent prior to the commencement of work on the systems or components listed in the statement of special inspections. The Contractor's statement of responsibility shall contain acknowledgement or awareness of the special requirements contained in the statement of special inspections.
B. Notification of QAA: The Contractor shall notify the QAA in a timely manner so that inspection and testing may be performed as outlined in the statement of special inspections.

9.3. Structural Observations by the Engineer of Record.
A. The Engineer of Record will perform structural observations at critical phases of the project. Observations will be made on a periodic basis throughout the construction of the structural system. Copies of the Engineer's report will be distributed to the Architect, Contractor, Owner, and building official.
B. Observation visits to the site by the Engineer's field representatives shall not be construed as inspection or approval of construction.

FFKR ARCHITECTS
730 Pacific Avenue · Salt Lake City, Utah 84104
O 801.521.6186 · FFKR.COM

Utah Fertility Center Outpatient Surgery Facility
1365 W Pleasant Grove Blvd, Pleasant Grove, UT 84062
UTAH FERTILITY CENTER
PERMIT SET - 03/12/2021

PROFESSIONAL STRUCTURAL ENGINEER
No. 7102977
JESSICA CHAPPELL
STATE OF UTAH
03/12/2021

△ DATE REVISION

PROJECT NUMBER 20087

GENERAL STRUCTURAL NOTES

S001

3/12/2021 3:26:33 PM

10. Statement of Special Inspections

10.1. The following materials, systems and components require special inspection or testing per Chapter 17 of the International Building Code (IBC).

10.2. For items requiring continuous inspection, a special inspector must be present onsite during the performance of that task. In most cases, periodic inspections/tests shall be performed prior to commencing the task, intermittently during the task, and at the completion of the task. Frequency marked with (E) designates periodic inspections that must be performed prior to or upon completion of every task.

Structural Steel per IBC Section 1705.2.1, 1705.12.1 & 1705.13.1

Item	Frequency	Detailed Instructions
Prior to Welding (Table N5.4-1, AISC 360-16):		
Verify welding procedures (WPS) and consumable certificates	Periodic (E)	
Material identification	Periodic	Verify type and grade of material.
Welder identification	Periodic	A system shall be maintained by which a welder who has welded a joint or member can be identified.
Fit-up groove welds	Periodic	Verify joint preparation, dimensions, cleanliness, tacking, and backing.
Access holes	Periodic	Verify configuration and finish.
Fit-up of fillet welds	Periodic	Verify alignment, gaps at root, cleanliness of steel surfaces, and tack weld quality and location.
During Welding (Table N5.4-2, AISC 360-16):		
Use of qualified welders	Periodic	Verify that welders are appropriately qualified.
Control and handling of welding consumables	Periodic	Verify packaging and exposure control.
Cracked tack welds	Periodic	Verify that welding does not occur over cracked tack welds.
Environmental conditions	Periodic	Verify wind speed is within limits as well as precipitation and temperature.
WPS followed	Periodic	Verify items such as settings on welding equipment, travel speed, welding materials, shielding gas type/flow rate, preheat applied, interpass temperature maintained, and proper position.
Welding techniques	Periodic	Verify interpass and final cleaning, each pass is within profile limitations, and each pass meets quality requirements.
After Welding (Table N5.4-3, AISC 360-16):		
Welds cleaned	Periodic	Verify that welds have been properly cleaned.
Size, length, and location of welds	Periodic (E)	
Welds meet visual acceptance criteria	Periodic (E)	Verify weld meets visual acceptance criteria based upon crack prohibition, weld/base-metal fusion, crater cross section, weld profiles, weld size, undercut, and porosity.
Arc strikes	Periodic (E)	
k-area	Periodic (E)	When welding of doubler plates, continuity plates or stiffeners has been performed in the k-area, visually inspect the web k-area for cracks within 3 in. of the weld.
Weld access holes in rolled heavy shapes and built-up heavy shapes (flange >2")	Periodic (E)	After rolled heavy shapes and built-up heavy shapes are welded, visually inspect the weld access holes for cracks.
Backing & weld tabs removed	Periodic (E)	
Repair activities	Periodic (E)	
Document acceptance or rejection of welded joint/member	Periodic (E)	
No prohibited welds	Periodic (E)	Verify no prohibited welds have been added without approval of the EOR.
Nondestructive Testing (Section N5.5, AISC 360-16):		
CJP welds (Risk Cat. II)	Periodic	Ultrasonic testing shall be performed on 10% of CJP groove welds in butt, T- and corner joints subject to transversely applied tension loading in materials 5/16-inch thick or greater per Section N5.5b. Testing rate must be increased to 100% if > 5% of welds tested have unacceptable defects per Section N5.5f.
Prior to Bolting (Table N5.6-1, AISC 360-16):		
Certifications of fasteners	Continuous	

Item	Frequency	Detailed Instructions
Fasteners marked	Periodic	Verify that fasteners have been marked in accordance with ASTM requirements.
Proper fasteners for joint	Periodic	Verify grade, type, and bolt length if threads are excluded from the shear plane.
Proper bolting procedure	Periodic	Verify proper procedure is used for the joint detail.
Connecting elements	Periodic	Verify appropriate faying surface condition and hole preparation, if specified, meet requirements.
Pre-installation verification testing	Periodic	Observe and document verification testing by installation personnel for fastener assemblies and methods used.
Proper storage	Periodic	Verify proper storage of bolts, nuts, washers, and other fastener components.
During Bolting (Table N5.6-2, AISC 360-16):		
Fastener assemblies	Periodic	Verify that fastener assemblies are of suitable condition, paced in all holes, and washers and nuts are positioned as required.
Fastener component	Periodic	Verify that fastener component not turned by wrench is prevented from rotating.
After Bolting (Table N5.6-3, AISC 360-16):		
Document acceptance or rejection of bolted connections	Periodic (E)	
Other Steel Inspections (Section N5.8, AISC 360-16: Table J8-1, J10-1, AISC 341-17):		
Structural steel details	Periodic	All fabricated steel or steel frames shall be inspected to verify compliance with the details shown in the construction documents, such as braces, stiffeners, member locations, and proper application of joint details at each connection.
Anchor rods and other embedments supporting structural steel	Periodic	Shall be on the premises during the placement of anchor rods and other embedments supporting structural steel for compliance with construction documents. Verify the diameter, grade, type, and length of the anchor rod or embedded item, and the extent or depth of embedment prior to placement of concrete.

Concrete Construction per IBC Sections 1705.3 &1705.12

Item	Frequency	Detailed Instructions
Reinforcing steel, including prestressing tendons	Periodic	Verify prior to placing concrete that reinforcing is of specified type, grade and size; that it is free of oil, dirt and rust; that it is located and spaced properly; that hooks, bends, ties, stirrups and supplemental reinforcement are placed correctly; that lap lengths, stagger and offsets are provided; and that all mechanical connections are installed per the manufacturer's instructions and/or evaluation report.
Cast-in bolts & embeds	Periodic	
Post-installed adhesive anchors installed in horizontally or upwardly inclined orientations to resist sustained tension loads	Continuous	All post-installed anchors/dowels shall be special inspected in accordance with the approved code evaluation report and with ACI Section 17.8.2.
Post-installed mechanical anchors and adhesive anchors not defined above	Periodic	
Use of required mix design	Periodic	Verify that all mixes used comply with the approved construction documents; ACI 318: Ch. 19, 26.4.3-26.4.4; and IBC 1904.1, 1908.2, 1908.3.
Concrete sampling for strength tests, slump, air content, and temperature	Continuous	Samples for strength tests shall be taken in accordance with ASTM C172, cured per ASTM C31 and tested in accordance with ASTM C39 by a testing agency complying with ASTM C1077. Acceptance criteria for strength tests shall be per ACI 318 Section 26.12.3. For each mix placed, samples shall be taken not less than once a day, nor less than once for each 150 yd³ of concrete, nor less than once for each 5000 ft² of surface area for slabs or walls. At the time fresh concrete is sampled to fabricate specimens for strength tests, perform slump and air content tests and determine the temperature of the concrete.
Concrete placement	Continuous	

Item	Frequency	Detailed Instructions
Curing temperature and techniques	Periodic	Verify that concrete is maintained at a temperature of at least 50°F and in a moist condition for at least 7 days after placement. Verify that high-early-strength concrete is maintained at a temperature of at least 50°F and in a moist condition for at least 3 days after placement. Accelerated curing methods may be used (see ACI 318: 26.5.3.2(c)). Shotcrete shall be maintained at a temperature of at least 40°F for the same period of time as noted for concrete and kept in the moist condition during curing periods in accordance to IBC 1908.9 All concrete materials, reinforcement, forms, fillers, and ground shall be free from frost. In hot weather conditions ensure that appropriate measures are taken to avoid plastic shrinkage cracking and that the specified water/cement ratio is not exceeded.
Formwork	Periodic	Verify that the forms are placed plumb and conform to the shapes, lines, and dimensions of the members as required by the approved construction documents.

Masonry Construction per IBC Section 1705.4

Item	Frequency	Detailed Instructions
Prior to Construction (Article 3.1.1, TMS-402/ACI 530.1-13):		
Review material certificates, mix designs, test results and construction procedures	Periodic	Verify that materials conform to the requirements of the approved construction documents. Mix design, test results, material certificates, and construction procedures should be submitted for review. Mortar mix designs shall conform to ASTM C 270 while grout shall comply with the proportion or strength requirements of ASTM C 476 or be based upon compressive strength tests in accordance with ASTM C1019. Material certificates shall be provided for the following: reinforcement; anchors, ties, fasteners, and metal accessories; masonry units; mortar and grout materials. Construction procedures for cold-weather or hot-weather construction shall be reviewed.
Verify f'_m and f'_{AAC} prior to construction	Periodic	Determine the compressive strength for each wythe by the "unit strength method" or by the "prism test method" as specified in Section 1.4B of ACI 530.1-13 prior to construction.
Proportions of site-prepared mortar	Periodic	Verify that mortar is of the type and color specified on the construction documents, that it conforms to ASTM C 270, and that it is mixed in accordance with Article 2.6 A of TMS-602/ACI 530.1-13.
Construction of mortar joints	Periodic	Verify that mortar joints comply with Article 3.3 B of TMS-602/ACI 530.1-13.
Properties of thin-bed mortar for AAC masonry	Periodic	Verify that mortar complies with Article 2.1 C of TMS-602/ACI 530.1-13.
Preparation of required grout specimens, mortar specimens and/or prisms shall be observed	Periodic	If the prism test method is used a minimum of three prisms shall be constructed in accordance with ASTM C1314. If the unit strength method is selected the compressive strength of the grout shall be determined per ASTM C1019 (not required if grout complies with ASTM C476).
Prior to Grouting (Table 3.1.2, TMS-402/ACI 530-13):		
Grout space	Periodic	Verify that grout space is free of mortar droppings, debris, loose aggregate, and other deleterious materials and that cleanouts are provided per Article 3.2 D and 3.2 F of TMS-602/ACI 530.1-13.
Grade, type, and size of reinforcement and anchor bolts	Periodic	Verify that reinforcement, joint reinforcement, wall ties, anchor bolts and veneer anchors comply with the approved construction documents and Section 1.6 of TMS 402/ACI 530-13.
Placement of reinforcement and connectors	Periodic	Verify that reinforcement, joint reinforcement, wall ties, anchor bolts and veneer anchors are installed in accordance with the approved construction documents and Articles 3.2 E, 3.4, and 3.6 A of TMS 602/ACI 530.1-13.
Proportions of site-prepared grout	Periodic	Verify that grout is proportioned per ASTM C 476 and has a slump between 8-11 inches. Self-consolidated grout shall not be proportioned onsite. (see Articles 2.6 B and 2.4 G.1.b of TMS 602/ACI 530.1-13. *Continuous inspection is required for Risk Category IV buildings.*
Placement of masonry units and construction of mortar joints	Periodic	Verify that face shells and head joints are fully mortared and that vertical cells are aligned and unobstructed openings for grout are provided. All units are to be clean and placed while mortar is soft and plastic. Verify that mortar joints are placed in accordance with Article 3.3 B of TMS 602/ACI 530.1-13.
During Masonry Construction (Table 3.1.2. TMS-402/ACI530-13):		
Size and location of structural elements	Periodic	Verify that structural elements are placed in locations specified on the approved construction documents and to the tolerances noted in Section 3.3F of TMS 602/ACI 530.1-13.
Type, size, and location of anchors, including other details of anchorage of masonry to structural members, frames, or other construction	Periodic	Verify that correct anchorages and connections are provided per the approved plans and Sections 1.16.4.3 and 1.17.1 of TMS 402/ACI 530-13. Verify that structural elements are placed in locations specified on the approved construction documents. Headed or bent bar anchor bolts shall be embedded in grout.
Preparation, construction, and protection of masonry during cold weather (<40°F) or hot weather (>90°F)	Periodic	Verify that cold-weather construction is performed in accordance with Article 1.8 C of TMS 602/ACI 530.1-13 and hot weather construction per Article 1.8 D of TMS 602/ACI 530.1-13.
Placement of grout	Continuous	
Self-consolidating grout	Continuous	
Placement of AAC masonry units and construction of thin-bed mortar joints	Periodic	Verify that mortar is placed in accordance with Article 3.3 B.8 of TMS-602/ACI 530.1-13.
Observation of grout specimens, mortar specimens, and/or prisms	Periodic	Confirm that specimens/prisms are performed as required by Article 1.4 of TMS-602/ACI 530.1-13. *Continuous inspection is required for Risk Category IV buildings.*
Minimum Testing:		
Verification of Slump Flow and Visual Stability Index (VSI) for self-consolidating grout	Periodic	Compressive strength tests should be performed in accordance with ASTM C 1019 for slump flow and ASTM C 1611 for VSI.
Verification of f'_m and f'_{AAC}	Periodic	Determine the compressive strength for each wythe by the "unit strength method" or by the "prism test method" as specified in Article 1.4 B of TMS 602/ACI 530.1-13 prior to construction. *For Risk Category IV buildings this should be verified at every 5,000ft² of construction.*
Verification of proportions of materials in premixed or pre-blended mortar and grout	Periodic	Verify that proportions for mortar meet ASTM C 270 and proportions for grout meet ASTM C 476. This applies to *Risk Category IV buildings only.*
Post-installed anchors or dowels		All post-installed anchors/dowels shall be specially inspected as required by the approved ICC-ES report.

Soils per IBC Section 1705.6

Item	Frequency	Detailed Instructions
Verify subgrade is adequate to achieve design bearing capacity	Periodic	Prior to placement of concrete.
Verify excavations extend to proper depth and material	Periodic	Prior to placement of compacted fill or concrete.
Verify that subgrade has been appropriately prepared prior to placing compacted fill	Periodic	Prior to placement of compacted fill.
Perform classification and testing of compacted fill materials	Periodic	All materials shall be checked at each lift for proper classifications and gradations not less than once for each 10,000ft² of surface area.
Verify proper materials, densities and lift thicknesses during placement and compaction.	Continuous	

FFKR ARCHITECTS
730 Pacific Avenue · Salt Lake City, Utah 84104
O 801.521.6186 · FFKR.COM

Utah Fertility Center Outpatient Surgery Facility
1365 W Pleasant Grove Blvd, Pleasant Grove, UT 84062
UTAH FERTILITY CENTER
PERMIT SET - 03/12/2021

PROFESSIONAL STRUCTURAL ENGINEER
No. 7102977
SCOTT CHAPPELL
STATE OF UTAH
03/12/2021

△ DATE REVISION

PROJECT NUMBER 20087

GENERAL STRUCTURAL NOTES

S002

3/12/2021 3:26:34 PM

PLAN LEGEND

- FOOTING STEP
- FOOTING - CONTINUOUS
- FOOTING - THICKENED SLAB
- FOOTING - SQUARE FOOTING - RECTANGULAR FOOTING - MAT FOOTING
- CHANGE IN ELEVATION
- SLAB BLOCK-OUT AT COLUMN
- SLAB CONTROL/CONSTRUCTION JOINT
- SPECIAL SLAB OR DECK AREA
- SPECIAL SLAB OR DECK AREA
- SPECIAL SLAB OR DECK AREA
- RECESSED/DEPRESSED SLAB
- OPENING
- CONCRETE HOUSEKEEPING PAD
- INDICATES ROOF DAVIT ARM BASE
- INDICATES WINDOW WASHING TIE-BACK
- CONCRETE OVER STEEL DECK
- STEEL DECK
- CONCRETE WALL
- CONCRETE WALL - RECESSED (FDTN PLAN)
- CONCRETE LINTEL (FRAMING PLAN)
- CONCRETE WALL - RECESSED AT DOOR
- CONCRETE PIER IN CONCRETE WALL. TOP OF PIER RECESSED BELOW SLAB.
- CONCRETE COLUMN
- CONCRETE JAMB COLUMN POURED MONOLITHIC WITH CONCRETE WALL
- MASONRY WALL
- MASONRY WALL - RECESSED (FDTN PLAN)
- MASONRY LINTEL (FRAMING PLAN)
- MASONRY COLUMN IN MASONRY WALL
- NON-BEARING WOOD WALL. SEE ARCH
- STEEL/WOOD BEAM OR GIRDER
- STEEL/WOOD JOIST OR PURLIN
- STEEL BRACED FRAME - ABOVE
- STEEL BRACED FRAME
- STEEL BEAM OR GIRDER
- STEEL JOIST OR PURLIN
- STEEL ANGLE BRACE / KICKER. SEE __/__ FOR SLAB EDGE KICKER. SEE __/__ FOR FRAME BRACE
- CROSS BRIDGING
- HORIZONTAL BRIDGING
- STEEL COLUMN - TUBE (HSS)
- STEEL COLUMN - WIDE FLANGE
- STEEL COLUMN - PIPE (HSS)
- EXISTING FOOTING - CONTINUOUS
- EXISTING FOOTING - THICKENED SLAB
- EXISTING FOOTING - SQUARE, RECTANGULAR, OR MAT
- EXISTING CONCRETE SHEAR WALL, FOUNDATION WALL OR RETAINING WALL
- EXISTING OPENING THROUGH CONCRETE WALL
- EXISTING CONCRETE PIER IN CONCRETE WALL. PIER RECESSED BELOW SLAB.
- EXISTING CONCRETE COLUMN
- NEW OPENING THROUGH EXISTING CONCRETE WALL
- EXISTING MASONRY WALL
- EXISTING OPENING THROUGH MASONRY WALL
- NEW OPENING THROUGH EXISTING MASONRY WALL
- EXISTING MASONRY COLUMN IN MASONRY WALL
- EXISTING STEEL COLUMN - TUBE
- EXISTING STEEL COLUMN - WIDE FLANGE
- EXISTING STEEL COLUMN - PIPE
- EXISTING STEEL BRACED FRAME
- EXISTING STEEL BEAM OR GIRDER
- EXISTING STEEL JOIST OR PURLIN
- EXISTING CROSS BRIDGING
- EXISTING HORIZONTAL BRIDGING
- EXISTING TO BE REMOVED
- EXISTING OPENING

STEEL FRAMING MEMBER DESIGNATION

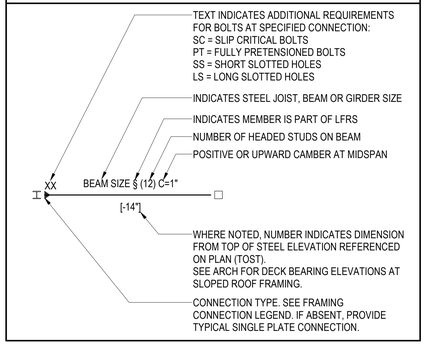

ABBREVIATIONS

@	AT
AB	ANCHOR BOLT (S)
ABV	ABOVE
ALT	ALTERNATE
APPROX	APPROXIMATE
ARCH	ARCHITECT(URAL)
BLDG	BUILDING
BLW	BELOW
BM	BEAM
BOT	BOTTOM
BRG	BEARING
BTWN	BETWEEN
CJ	CONSTRUCTION JOINT OR CONTROL JOINT
CJP	COMPLETE JOINT PENETRATION
CMU	CONCRETE MASONRY UNIT
COL	COLUMN
CONC	CONCRETE
CONST	CONSTRUCTION
CONT	CONTINUOUS
CONTR	CONTRACTOR
CTR	CENTER
D.B.	DECK BEARING
db	DIAMETER OF REINFORCING BAR
DBA	DEFORMED BAR ANCHORS
DBL	DOUBLE
DET	DETAIL
DIA (OR Ø)	DIAMETER
DIAG	DIAGONAL
DIM	DIMENSION
DK	DECK
DN	DOWN
DWG	DRAWING
DWL	DOWEL
E.F.	EACH FACE
E.J.	EXPANSION JOINT (SEISMIC SEPARATION JOINT)
E.W.	EACH WAY
EA	EACH
EL	ELEVATION
ELEC	ELECTRICAL
ELEV	ELEVATOR
ENG	ENGINEER
EQ	EQUAL
EQUIP	EQUIPMENT
EXIST (E)	EXISTING
EXP	EXPANSION / EXPOSED
EXT	EXTERIOR
F.D.	FLOOR DRAIN
F.F.	FINISH FLOOR
F.V.	FIELD VERIFY
FDTN	FOUNDATION
FIN	FINISH
FL	FLOOR
FT	FOOT
FTG	FOOTING
GA	GAUGE
GALV	GALVANIZED
GLB	GLU-LAMINATED BEAM
GR	GRADE
GSN	GENERAL STRUCTURAL NOTES
HB	HORIZONTAL BRIDGING
HORIZ	HORIZONTAL
HSA	HEADED STUD ANCHORS
HSS	HOLLOW STRUCTURAL STEEL
HT	HEIGHT
I.F.	INSIDE FACE
IBC	INTERNATIONAL BUILDING CODE
ICC	INTERNATIONAL CODE COUNCIL
IN	INCH
INSUL	INSULATION
INT	INTERIOR
JST	JOIST
JT	JOINT
K	KIPS - 1,000 POUNDS
KLF	KIPS PER LINEAL FOOT
KSF	KIPS PER SQUARE FOOT
KSI	KIPS PER SQUARE INCH
LBS	POUNDS
Ld, Lt, Lsb, Lsbt, Ldc, Lsc	SEE CONCRETE REINFORCING BAR DEVELOPMENT AND LAP LENGTH SCHEDULE
LF	LINEAL FOOT
LFRS	LATERAL FORCE RESISTING SYSTEM (SFRS & WFRS)
LLH	LONG LEG HORIZONTAL
LLV	LONG LEG VERTICAL
LSH	LONG SIDE HORIZONTAL
LSV	LONG SIDE VERTICAL
MAS	MASONRY
MAX	MAXIMUM
MCJ	MASONRY CONTROL JOINT
MECH	MECHANICAL
MFGR	MANUFACTURER
MIN	MINIMUM
MISC	MISCELLANEOUS
NIC	NOT IN CONTRACT
NORM	NORMAL
NTS	NOT TO SCALE
O.C.	ON CENTER
O.F.	OUTSIDE FACE
OPNG	OPENING
OPP	OPPOSITE
OWSJ	OPEN WEB STEEL JOIST
P.T.	POST-TENSIONED
PCF	POUNDS/CUBIC FOOT
PJP	PARTIAL JOINT PENETRATION
PL	PLATE
PLF	POUNDS/LINEAL FOOT

ABBREVIATIONS

PNL	PANEL
PSF	POUNDS/SQ FOOT
PSI	POUNDS/SQ INCH
R.D.	ROOF DRAIN
REINF	REINFORCING
REQD	REQUIRED
SFRS	SEISMIC FORCE RESISTING SYSTEM
SHT	SHEET
SI	SPECIAL INSPECTION (SP. INSP.)
SIM	SIMILAR
SOG	SLAB ON GRADE
SQ	SQUARE
STAG	STAGGERED
STD	STANDARD
STIFF	STIFFENER
STL	STEEL
STRUCT	STRUCTURAL
T & B	TOP AND BOTTOM
T.O.	TOP OF
TEMP	TEMPERATURE
THDS	THREADS
TOC	TOP OF CONCRETE
TOCP	TOP OF CONCRETE PIER
TOF	TOP OF FOOTING
TOS	TOP OF SLAB
TOST	TOP OF STEEL
TOW	TOP OF WALL
TYP	TYPICAL
UNO	UNLESS NOTED OTHERWISE
VERT	VERTICAL
W.P.	WORK POINT
W/	WITH
WF	WIDE FLANGE
WFRS	WIND FORCE RESISTING SYSTEM
WT	WEIGHT
WWF	WELDED WIRE FABRIC
YD	YARD

PLAN MARKS

BF-#	BRACED FRAME
CB-#	CONCRETE BEAM
CC-#	CONCRETE COLUMN
CCSS-#	CANTILEVERED CONCRETE SUSPENDED SLAB
CDP-#	CONCRETE DRILLED PIER
CFW-#	CONCRETE FOUNDATION WALL
CGB-#	CONCRETE GRADE BEAM
CJ-#	CONCRETE JOIST
CJC-#	CONCRETE JAMB COLUMN
CL-#	CONCRETE LINTEL
CP-#	CONCRETE PIER
CRW-#	CONCRETE RETAINING WALL
CSG-#	CONCRETE SLAB ON GRADE
CSH-#	CONCRETE SHEAR HEAD
CSS-#	CONCRETE SUSPENDED SLAB
CSW-#	CONCRETE SHEAR WALL
CW-#	CONCRETE WALL
FC#	CONTINUOUS FOOTING
FM#	MAT FOOTING
FR#	RECTANGULAR FOOTING
FS#	SQUARE FOOTING
FTS#	THICKENED SLAB FOOTING
HD-#	HOLD DOWN ANCHOR
MC-#	MASONRY COLUMN
MF-#	MOMENT FRAME
ML-#	MASONRY LINTEL
MP-#	MASONRY PIER
MW-#	MASONRY WALL
PTB-#	POST-TENSIONED CONCRETE BEAM
SBP-#	STEEL BASE PLATE
SC-#	STEEL COLUMN
SCP-#	STEEL CAP PLATE
SD-#	STEEL DECK
SDA-#	STEEL DECK ATTACHMENT
SG-#	STEEL GIRDER
SJ-#	STEEL JOIST
SND-#	SNOW DRIFT
WB-#	WOOD BEAM
WBW-#	WOOD BEARING WALL
WC-#	WOOD COLUMN
WD-#	WOOD DIAPHRAGM
WJ-#	WOOD JOIST
WSW-#	WOOD SHEAR WALL

STRUCTURAL DRAWING LIST

SHT NO.	SHT NAME
S001	GENERAL STRUCTURAL NOTES
S002	GENERAL STRUCTURAL NOTES
S003	LEGENDS & ABBREVIATIONS
S101	EXISTING FOOTING AND FOUNDATION PLAN
S102	EXISTING SECOND FLOOR FRAMING PLAN
S103	EXISTING THIRD FLOOR/ROOF FRAMING PLAN
S301	CONCRETE SCHEDULES
S401	FOOTING AND FDTN DETAIL SHEET
S501	DETAIL SHEET
S701	DETAIL SHEET

FFKR ARCHITECTS
730 Pacific Avenue · Salt Lake City, Utah 84104
O 801.521.6186 · FFKR.COM

Utah Fertility Center Outpatient Surgery Facility
1365 W Pleasant Grove Blvd, Pleasant Grove, UT 84062
UTAH FERTILITY CENTER
PERMIT SET - 03/12/2021

PROFESSIONAL STRUCTURAL ENGINEER
No. 7102977
JESSICA S. CHAPPELL
STATE OF UTAH

03/12/2021

△ DATE REVISION

PROJECT NUMBER 20087

LEGENDS & ABBREVIATIONS

S003

3/12/2021 3:26:34 PM

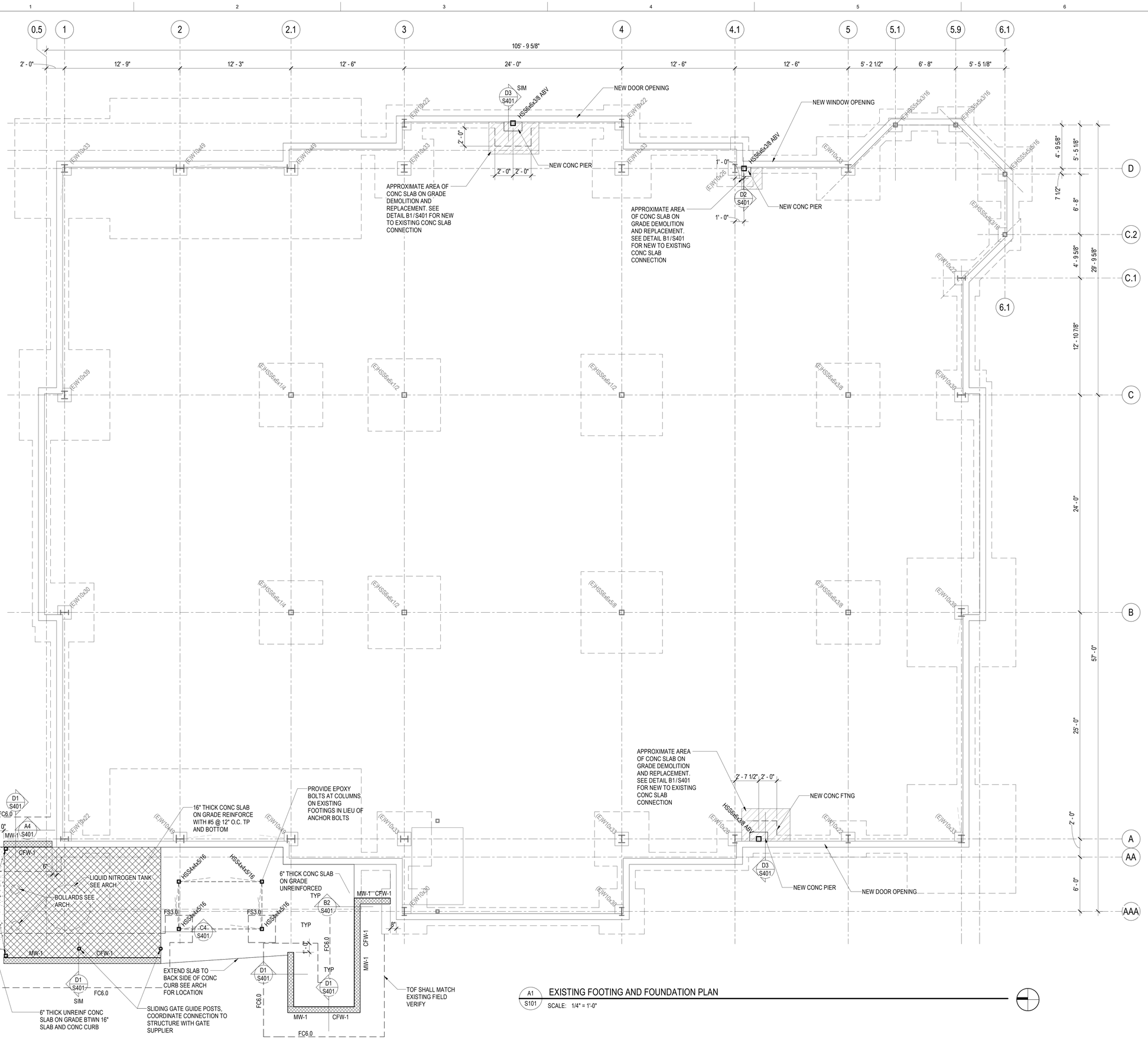

A1 S101 EXISTING FOOTING AND FOUNDATION PLAN

SCALE: 1/4" = 1'-0"

REFERENCE NOTES

EXISTING BUILDING NOTES

1. THE CONTRACTOR SHALL FIELD VERIFY ALL EXISTING CONDITIONS PRIOR TO DETAILING, FABRICATING, ERECTING OR INSTALLING ANY STRUCTURAL ELEMENT. ALL DISCREPANCIES SHALL BE BROUGHT TO THE ATTENTION OF THE DESIGN TEAM IN A TIMELY MANNER SUCH THAT WORK WILL NOT BE DELAYED.

2. THE CONTRACTOR SHALL PROVIDE ADEQUATE SHORING OF EXISTING STRUCTURE DURING CONSTRUCTION.

FOOTING & FOUNDATION PLAN NOTES

1. SEE ARCHITECTURAL, CIVIL AND LANDSCAPE DRAWINGS FOR EXTERIOR CONCRETE RETAINING AND / OR SITE WALLS NOT SHOWN ON THE STRUCTURAL DRAWINGS.

2. PROVIDE REINFORCEMENT AT WALL ENDS AND INTERSECTIONS PER TYPICAL DETAIL B3/S401 .

3. COORDINATE DRAIN LINE AT HUMIDIFIER WITH ARCH/MECH DRAWINGS, SEE DETAILS A1/S401 & A2/S401 FOR SLEEVES AT FOOTINGS OR FOUNDATION WALLS.

FFKR ARCHITECTS
730 Pacific Avenue · Salt Lake City, Utah 84104
O 801.521.6186 · FFKR.COM

Utah Fertility Center Outpatient Surgery Facility
1365 W Pleasant Grove Blvd, Pleasant Grove, UT 84062
UTAH FERTILITY CENTER
PERMIT SET - 03/12/2021

PROFESSIONAL STRUCTURAL ENGINEER No. 7102977 JESSICA S. CHAPPELL STATE OF UTAH
03/12/2021

△	DATE	REVISION

PROJECT NUMBER 20087

EXISTING FOOTING AND FOUNDATION PLAN

S101

3/12/2021 3:26:35 PM

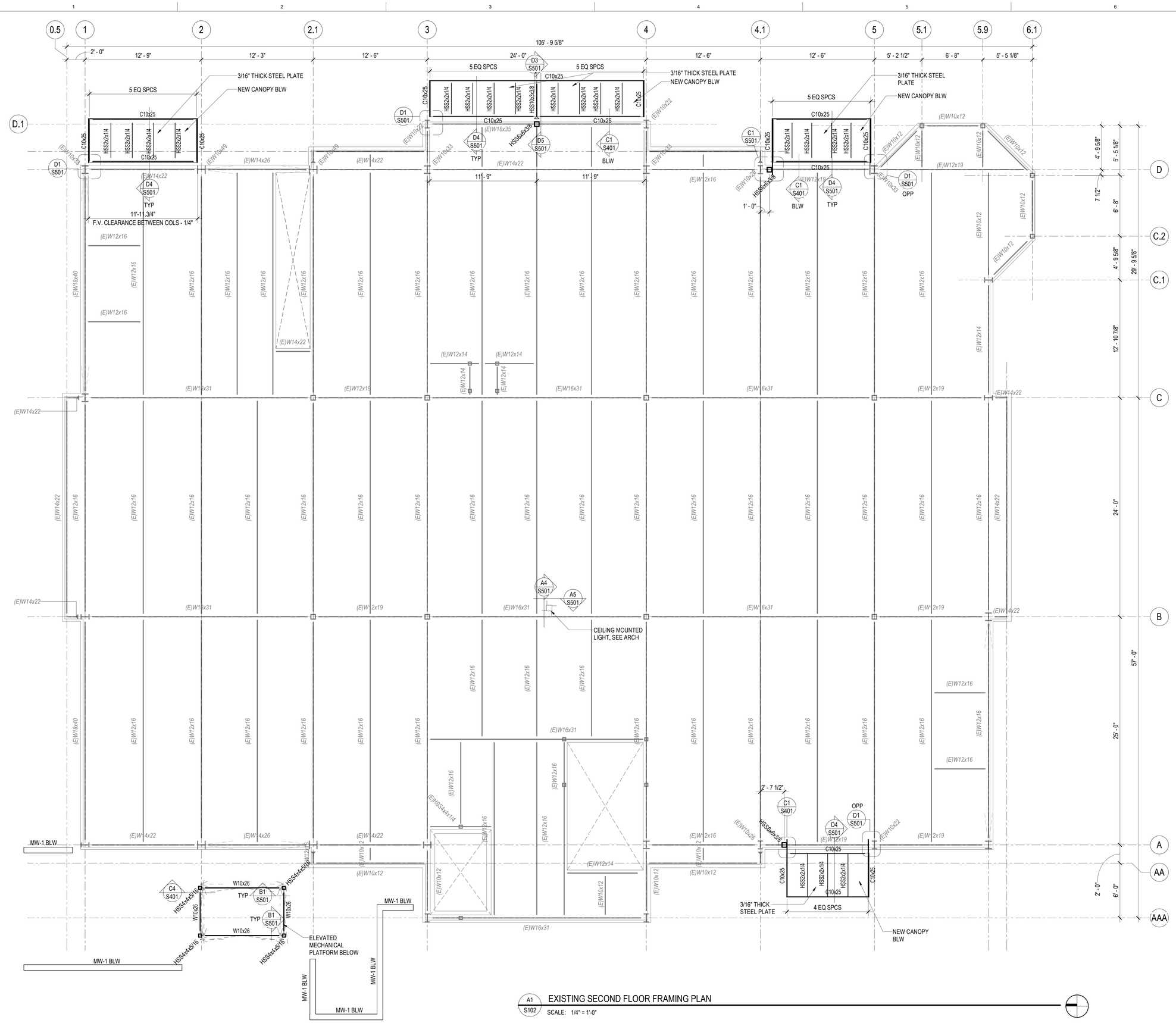

A1 / S102 EXISTING SECOND FLOOR FRAMING PLAN

SCALE: 1/4" = 1'-0"

REFERENCE NOTES

EXISTING BUILDING NOTES

1. THE CONTRACTOR SHALL FIELD VERIFY ALL EXISTING CONDITIONS PRIOR TO DETAILING, FABRICATING, ERECTING OR INSTALLING ANY STRUCTURAL ELEMENT. ALL DISCREPANCIES SHALL BE BROUGHT TO THE ATTENTION OF THE DESIGN TEAM IN A TIMELY MANNER SUCH THAT WORK WILL NOT BE DELAYED.

2. THE CONTRACTOR SHALL PROVIDE ADEQUATE SHORING OF EXISTING STRUCTURE DURING CONSTRUCTION.

FFKR ARCHITECTS
730 Pacific Avenue · Salt Lake City, Utah 84104
O 801.521.6186 · FFKR.COM

Utah Fertility Center Outpatient Surgery Facility
1365 W Pleasant Grove Blvd, Pleasant Grove, UT 84062
UTAH FERTILITY CENTER
PERMIT SET - 03/12/2021

PROFESSIONAL STRUCTURAL ENGINEER
No. 7102977
JESSICA S. CHAPPELL
STATE OF UTAH

03/12/2021

△ DATE REVISION

PROJECT NUMBER 20087

EXISTING SECOND FLOOR FRAMING PLAN

S102

3/12/2021 3:26:35 PM

REFERENCE NOTES

EXISTING BUILDING NOTES

1. THE CONTRACTOR SHALL FIELD VERIFY ALL EXISTING CONDITIONS PRIOR TO DETAILING, FABRICATING, ERECTING OR INSTALLING ANY STRUCTURAL ELEMENT. ALL DISCREPANCIES SHALL BE BROUGHT TO THE ATTENTION OF THE DESIGN TEAM IN A TIMELY MANNER SUCH THAT WORK WILL NOT BE DELAYED.

2. THE CONTRACTOR SHALL PROVIDE ADEQUATE SHORING OF EXISTING STRUCTURE DURING CONSTRUCTION.

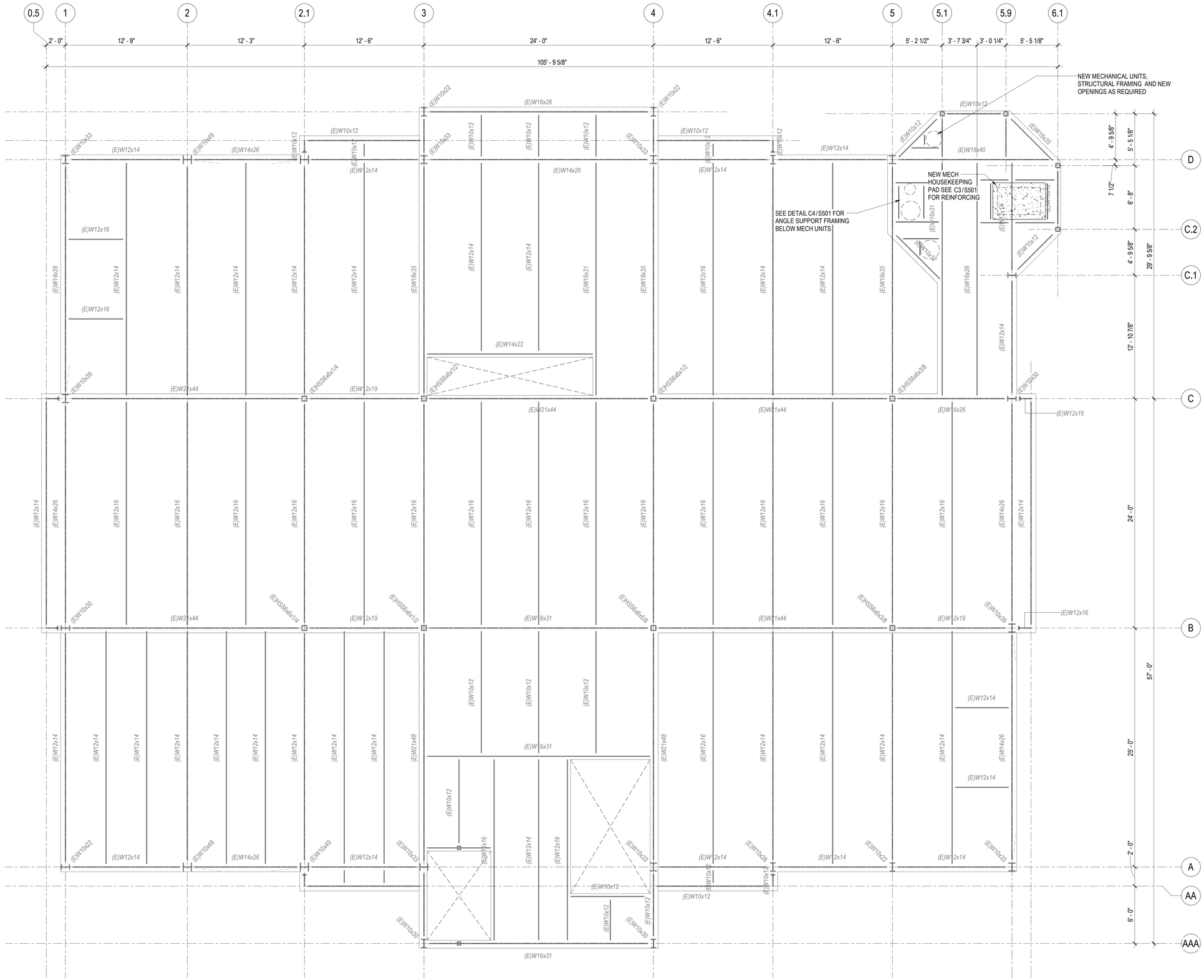

A1 / S103 EXISTING THIRD FLOOR FRAMING PLAN

SCALE: 1/4" = 1'-0"

FFKR ARCHITECTS
730 Pacific Avenue · Salt Lake City, Utah 84104
O 801.521.6186 · FFKR.COM

Utah Fertility Center Outpatient Surgery Facility
1365 W Pleasant Grove Blvd, Pleasant Grove, UT 84062
UTAH FERTILITY CENTER
PERMIT SET - 03/12/2021

PROFESSIONAL STRUCTURAL ENGINEER
No. 7102977
JESSICA S. CHAPPELL
STATE OF UTAH
03/12/2021

△ DATE REVISION

PROJECT NUMBER 20087

EXISTING THIRD FLOOR/ROOF FRAMING PLAN

S103

3/12/2021 3:26:35 PM

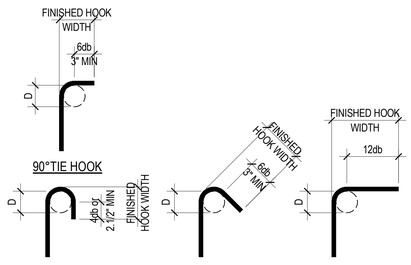

END HOOK SCHEDULE					
BAR SIZE	D	FINISHED HOOK WIDTH			
		180° HOOK	135° HOOK	90° HOOK	90° TIE HOOK
#3	2.1/4"	3"	4.1/4"	6"	4"
#4	3"	4"	4.1/2"	8"	4.1/2"
#5	3.1/4"	5"	5.1/2"	10"	6"
#6	4.1/2"	6"	8"	12"	--
#7	5.1/4"	7"	9"	14"	--
#8	6"	8"	10.1/2"	16"	--
#9	9.1/2"	11.3/4"	--	19"	--
#10	10.3/4"	13.1/4"	--	22"	--
#11	12"	14.3/4"	--	24"	--
#14	18.1/4"	21.3/4"	--	31"	--
#18	24"	28.1/2"	--	41"	--

D1 / S301 REINFORCEMENT END HOOK SCHEDULE
NO SCALE

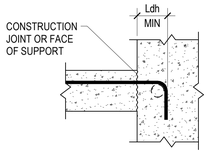

TENSION HOOK DEVELOPMENT LENGTH (Ldh)					
BAR SIZE	NORMAL WEIGHT CONCRETE, f'c = PSI				
	3,000	4,000	4,500	5,000	6,000
#3	6"	6"	6"	6"	6"
#4	8"	7"	7"	7"	7"
#5	10"	9"	8"	8"	7"
#6	12"	10"	10"	9"	8"
#7	14"	12"	11"	11"	10"
#8	16"	14"	13"	12"	11"
#9	18"	15"	14"	14"	13"
#10	20"	17"	16"	15"	14"
#11	22"	19"	18"	17"	16"
#14	37"	32"	31"	29"	27"
#18	50"	43"	41"	39"	35"

NOTES:
1. VALUES HERE VALID FOR ALL CASES IF:
   SIDE COVER ≥ 2.1/2"
   END COVER ≥ 2"

2. MULTIPLY VALUES IN SCHEDULE BY 1.33 FOR LIGHTWEIGHT CONCRETE

3. MULTIPLY VALUES IN SCHEDULE BY 1.2 FOR USE WITH EPOXY COATED REBAR

D2 / S301 TENSION HOOK DEVELOPMENT SCHEDULE
NO SCALE

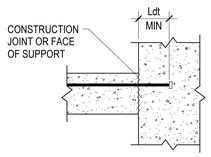

TENSION HEADED BAR DEVELOPMENT LENGTH (Ldt)					
BAR SIZE	NORMAL WEIGHT CONCRETE, f'c = PSI				
	3,000	4,000	4,500	5,000	6,000
#3	7"	6"	6"	6"	6"
#4	9"	8"	8"	7"	7"
#5	11"	10"	9"	9"	8"
#6	14"	12"	11"	11"	10"
#7	16"	14"	13"	12"	11"
#8	18"	16"	15"	14"	13"
#9	20"	18"	17"	16"	14"
#10	23"	20"	19"	18"	16"
#11	25"	22"	21"	20"	18"

NOTES:
1. VALUES HERE VALID FOR ALL CASES IF:
   A. CLEAR COVER OF BAR ≥ 2*db. WHERE db IS BAR DIAMETER IN INCHES
   B. CLEAR SPACING BETWEEN BARS ≥ 4*db
   C. NET BEARING AREA OF HEAD Abrg ≥ 4*Ab, WHERE Ab IS AREA OF BAR

2. MULTIPLY VALUES IN SCHEDULE BY 1.2 FOR USE WITH EPOXY COATED REBAR.

3. FOR GRADE 60 REINFORCING ONLY.

D3 / S301 TENSION HEADED BAR DEVELOPMENT SCHEDULE
NO SCALE

CONCRETE REINFORCING BAR DEVELOPMENT AND LAP SPLICE LENGTH SCHEDULE																						
BAR SIZE	f'c = 3000 PSI				f'c = 4000 PSI				f'c = 4500 PSI				f'c = 5000 PSI				f'c = 6000 PSI				f'c = ALL	
	Ld	Lt	Lsb	Lsbt	Ld	Lt	Lsb	Lsbt	Ld	Lt	Lsb	Lsbt	Ld	Lt	Lsb	Lsbt	Ld	Lt	Lsb	Lsbt	Ldc	Lsc
#3	17"	22"	22"	28"	15"	19"	19"	25"	14"	18"	18"	23"	13"	17"	17"	22"	12"	16"	16"	20"	8"	12"
#4	22"	29"	29"	38"	19"	25"	25"	33"	18"	24"	24"	31"	17"	23"	23"	29"	16"	21"	21"	27"	10"	15"
#5	28"	36"	36"	47"	24"	31"	31"	41"	23"	30"	30"	38"	22"	28"	28"	36"	20"	26"	26"	33"	12"	19"
#6	33"	43"	43"	56"	29"	37"	37"	49"	27"	35"	35"	46"	26"	34"	34"	44"	24"	31"	31"	40"	15"	23"
#7	48"	63"	63"	81"	42"	54"	54"	71"	40"	51"	51"	67"	38"	49"	49"	63"	34"	45"	45"	58"	17"	27"
#8	55"	72"	72"	93"	48"	62"	62"	81"	45"	59"	59"	76"	43"	56"	56"	72"	39"	51"	51"	66"	19"	30"
#9	62"	81"	81"	105"	54"	70"	70"	91"	51"	66"	66"	86"	48"	63"	63"	81"	44"	57"	57"	74"	22"	34"
#10	70"	91"	91"	118"	61"	79"	79"	102"	57"	74"	74"	96"	54"	71"	71"	92"	50"	64"	64"	84"	24"	39"
#11	78"	101"	101"	131"	67"	87"	87"	114"	64"	82"	82"	107"	60"	78"	78"	102"	55"	71"	71"	93"	27"	43"
#14	93"	121"	NA	NA	81"	105"	NA	NA	76"	99"	NA	NA	72"	94"	NA	NA	66"	86"	NA	NA	33"	NA
#18	124"	161"	NA	NA	108"	140"	NA	NA	101"	132"	NA	NA	96"	125"	NA	NA	88"	114"	NA	NA	43"	NA

NOTES:
1. DEFINITIONS:
   Ld: TENSION DEVELOPMENT LENGTH FOR REINFORCEMENT SATISFYING THE FOLLOWING CONDITIONS:
   SLABS AND WALLS: CLEAR SPACING > 2db AND CONCRETE CLEAR COVER > db
   BEAMS AND COLUMNS: CLEAR COVER SPACING > db AND CONCRETE CLEAR COVER > db
   Lt: DEVELOPMENT LENGTH FOR TOP BARS IN TENSION
   Lsb: TENSION LAP SPLICE LENGTH FOR OTHER THAN TOP BARS (CLASS B)
   Lsbt: TENSION LAP SPLICE LENGTH OF TOP BARS.
   Ldc: DEVELOPMENT LENGTH FOR BARS IN COMPRESSION
   Lsc: TIED COLUMN LAP SPLICE IN COMPRESSION
   db: NOMINAL BAR DIAMETER (INCHES)
   TOP BARS: HORIZONTAL BEAM REINFORCEMENT WITH MORE THAN 12 INCHES OF CONCRETE CAST BELOW

2. MULTIPLY VALUES IN SCHEDULE BY 1.5 IF CLEAR SPACING OR CONCRETE COVER DO NOT MEET REQUIREMENTS FOR Ld IN NOTE 1.

3. MULTIPLY VALUES IN SCHEDULE BY 1.3 FOR USE IN LIGHTWEIGHT AGGREGATE CONCRETE.

4. FOR EPOXY COATED BAR: MULTIPLY VALUES IN SCHEDULE BY 1.5 FOR BARS WITH CLEAR COVER < 3db OR CLEAR SPACING < 6db. OTHERWISE MULTIPLY VALUES BY 1.2.

5. a. FOR BUNDLED BARS OF THREE OR LESS MULTIPLY LENGTHS BY 1.2.
   b. FOR BUNDLED BARS OF FOUR OR MORE MULTIPLY LENGTHS BY 1.33.
   c. INDIVIDUAL BAR SPLICES WITHIN A BUNDLE SHALL NOT OVERLAP. ENTIRE BUNDLES SHALL NOT BE LAP SPLICED.

6. SCHEDULE LENGTHS ARE FOR fy=60ksi REINFORCING, MULTIPLY LENGTHS BY 1.25 FOR fy=75ksi REINFORCING.

7. LAP SPLICES ARE NOT PERMITTED FOR #14 & #18 BARS. USE BAR COUPLERS PER G.S.N.

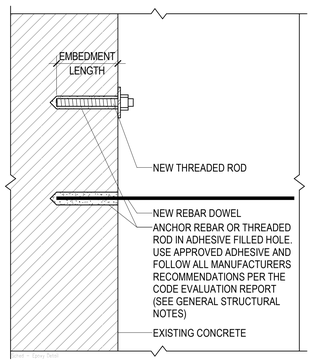

ADHESIVE ANCHORS IN CONCRETE SCHEDULE			
REINFORCING BAR		THREADED ROD	
DOWEL SIZE	EMBEDMENT LENGTH (SEE NOTE #2)	SIZE	EMBEDMENT LENGTH (SEE NOTE #2)
#3	4"	3/8"Ø	4 1/2"
#4	6"	1/2"Ø	6"
#5	9"	5/8"Ø	7 1/2"
#6	10"	3/4"Ø	9"
#7	12 1/2"	7/8"Ø	10 1/2"
#8	13"	1"Ø	12"
#9	14"	1 1/4"Ø	15"
#10	18"		
#11	19"		

NOTES:
1. THIS SCHEDULE SHALL BE USED ONLY WHERE SPECIFICALLY REFERENCED ON THE DRAWINGS AND AT OTHER LOCATIONS WITH APPROVAL OF THE STRUCTURAL ENGINEER.

2. EMBEDMENT LENGTHS SPECIFIED ON PLANS OR DETAILS TAKE PRECEDENCE OVER EMBEDMENT LENGTHS IN THIS SCHEDULE.

3. WHERE THE THICKNESS OF THE EXISTING CONCRETE MEMBER IS NOT SUFFICIENT TO ACHIEVE SCHEDULED EMBEDMENT AND SPECIFIED CLEAR COVER FOR THE ANCHOR, CONTACT THE STRUCTURAL ENGINEER.

4. SEE GENERAL STRUCTURAL NOTES FOR LIST OF APPROVED ADHESIVES AND OTHER REQUIREMENTS FOR ADHESIVE ANCHORING.

B1 / S301 ADHESIVE ANCHORS IN CONCRETE SCHEDULE
NO SCALE

CONCRETE FOOTING SCHEDULE											
MARK	WIDTH	LENGTH	THICK	CROSSWISE REINFORCING				LENGTHWISE REINFORCING				REMARKS
				NO.	SIZE	LENGTH	SPACE	NO.	SIZE	LENGTH	SPACE	
FC6.0	6' - 0"	CONT.	1' - 6"	-- --	#4 #6	5' - 6" 5' - 6"	12" 12"	6 6	#4 #4	CONT. CONT.	13.2" 13.2"	TOP BOTTOM
FS3.0	3' - 0"	3' - 0"	1' - 6"	4	#4	2'-6"	10"	4	#4	2'-6"	10"	

1. PLACE ALL FOOTING REINFORCING IN BOTTOM OF FOOTING WITH 3" CLEAR CONCRETE COVER UNLESS NOTED OTHERWISE.
2. TOP REINFORCING, WHERE SPECIFIED, SHALL BE PLACED IN THE TOP OF THE FOOTING WITH 2" CLEAR CONCRETE COVER.
3. SPOT FOOTINGS SHALL BE CENTERED UNDER COLUMNS AND CONTINUOUS FOOTINGS SHALL BE CENTERED UNDER WALLS, UNLESS NOTED OTHERWISE.
4. ALL FOOTINGS SHALL BE FORMED. FOOTINGS SHALL NOT BE EARTH FORMED OR OVERSIZED WITHOUT WRITTEN PERMISSION FROM THE STRUCTURAL ENGINEER.

CONCRETE FOUNDATION WALL SCHEDULE					
MARK	THICK	HORIZONTAL REINFORCING	VERTICAL REINFORCING	T & B HORIZ. BARS	PLACEMENT
CFW-1	8"	#5 @ 15" O.C.	#4 @ 16" O.C.	2-#5	TYPE A

NOTES:
1. HORIZONTAL WALL REINFORCING SHALL BE CONTINUOUS THRU CONSTRUCTION & CONTROL JOINTS.
2. SPLICES IN HORIZONTAL WALL REINFORCING SHALL BE TYPE Lsb, STAGGERED SUCH THAT SPLICES DO NOT OVERLAP. SPLICES IN TWO CURTAINS SHALL NOT OCCUR IN THE SAME LOCATION.

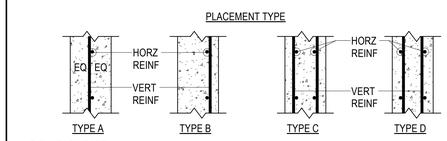

E.F. = EACH FACE
O.F. = OUTSIDE FACE (AGAINST SOIL)
I.F. = INSIDE FACE
3L = THREE LAYERS

MASONRY WALL SCHEDULE						
MARK	THICK	MATERIAL	REINFORCING			REMARKS
			VERTICAL	HORIZONTAL	TYPE	
MW-1	8"	ATLAS	#6 @ 8" O.C.	#4 @ 32" O.C.	--	f'm=2500

NOTES
1. SEE PLANS, DETAILS AND GENERAL STRUCTURAL NOTES FOR ADDITIONAL REINFORCING REQUIREMENTS.
2. GROUT SOLID ALL CELLS BELOW GRADE, CELLS CONTAINING EMBEDS (HSA'S, DBA'S, ANCHOR BOLTS, ETC.), AND CELLS CONTAINING REINFORCING. CONSOLIDATE GROUT AS PER THE GENERAL STRUCTURAL NOTES.
3. HORIZONTAL WALL REINFORCING SHALL CONTINUE THROUGH MASONRY LINTELS. WHERE BOTH HORIZONTAL WALL REINFORCING AND LINTEL REINFORCING OCCUR IN THE SAME COURSE, THE LARGER BARS ARE TO REPLACE THE SMALLER BARS.

MASONRY REINFORCING BAR LAP SPLICE SCHEDULE											
BAR SIZE	f'm = 2000 psi							f'm = 2500 psi			
	6" CMU	8" CMU		10" CMU		12" CMU		6" BRICK	8" BRICK		
	CLASS	CLASS		CLASS		CLASS		CLASS	CLASS		
	A	A	B	A	B	A	B	A	A	B	
#3	12"	12"	12"	12"	12"	12"	12"	12"	12"	12"	
#4	18"	13"	21"	12"	20"	12"	20"	16"	12"	20"	
#5	28"	20"	35"	16"	32"	13"	32"	25"	18"	33"	
#6	**	38"	54"	29"	54"	24"	54"	**	34"	54"	
#7	-	52"	**	40"	**	33"	63"	-	47"	-	
#8	-	**	-	61"	**	50"	**	-	**	-	
#9	-	-	-	79"	-	64"	-	-	-	-	

NOTES:
1. CLASS A SPLICES MAY BE USED WHEN ONLY ONE BAR IS CONTINUOUS IN THE MASONRY CELL OR COURSE.

2. CLASS B SPLICES SHALL BE USED WHEN TWO BARS ARE CONTINUOUS IN THE MASONRY CELL OR COURSE.

3. ** INDICATES THAT A LAP SPLICE IS NOT ALLOWED AND MECHANICAL BAR COUPLERS ARE REQUIRED FOR THE BAR SPLICES. SPLICES SHALL BE OFFSET 2'-0" TO AVOID CONGESTION.

4. WHERE VERTICAL BARS HAVE A REQUIRED LAP SPLICE GREATER THAN THE HEIGHT OF THE GROUT POUR, THE BAR SPLICE SHALL BE MADE WITH A MECHANICAL BAR COUPLER. WHERE THE HEIGHT OF THE GROUT POUR EXCEEDS 60 INCHES, HIGH LIFT GROUTING PROCEDURES SHALL BE FOLLOWED.

5. WHERE MECHANICAL BAR COUPLERS ARE USED, THE CONNECTOR SHALL DEVELOP 125% OF THE SPECIFIED YIELD STRENGTH OF THE BAR IN TENSION AND COMPRESSION.

FFKR ARCHITECTS
730 Pacific Avenue • Salt Lake City, Utah 84104
O 801.521.6186 • FFKR.COM

Utah Fertility Center Outpatient Surgery Facility
1365 W Pleasant Grove Blvd, Pleasant Grove, UT 84062
UTAH FERTILITY CENTER
PERMIT SET - 03/12/2021

PROFESSIONAL STRUCTURAL ENGINEER No. 7102977 JESSICA S. CHAPPELL STATE OF UTAH
03/12/2021

△ DATE REVISION

PROJECT NUMBER 20087

CONCRETE SCHEDULES

S301

3/12/2021 3:26:36 PM

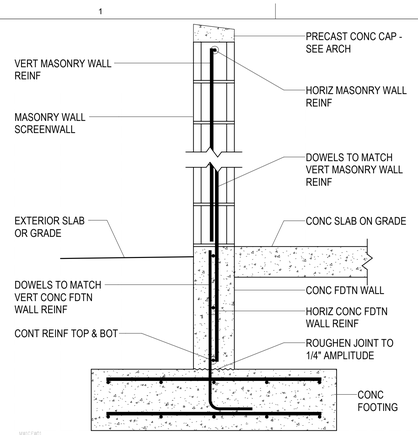

D1 S401 TYPICAL MASONRY SCREEN WALL ON FOUNDATION WALL

NO SCALE

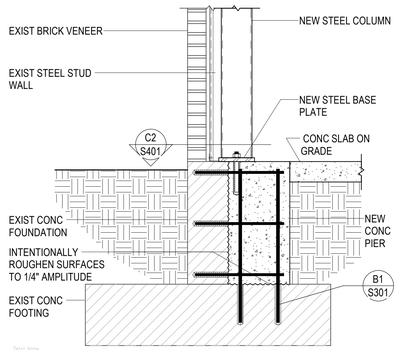

D2 S401 STEEL COLUMN CONNECTION AT BASE

NO SCALE

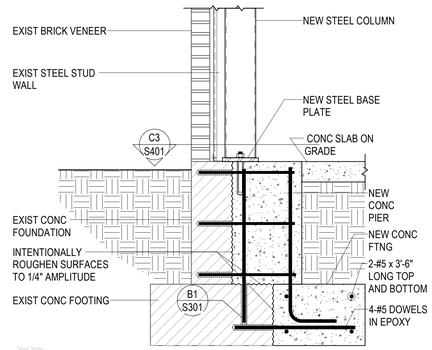

D3 S401 STEEL COLUMN CONNECTION AT BASE

NO SCALE

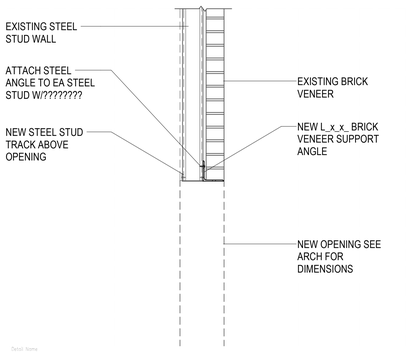

C1 S401 DETAIL AT NEW OPENING IN STEEL STUD WALL

NO SCALE

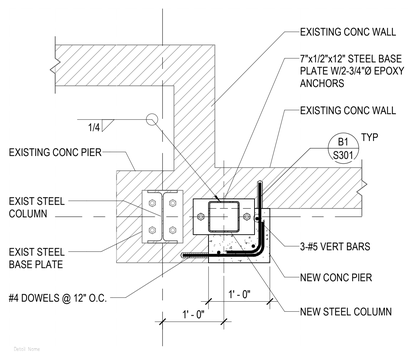

C2 S401 NEW CONCRETE PIER (PLAN VIEW)

NO SCALE

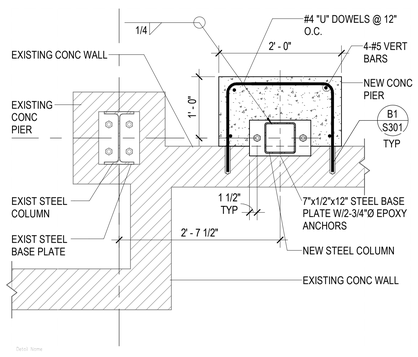

C3 S401 NEW CONCRETE PIER (PLAN VIEW)

NO SCALE

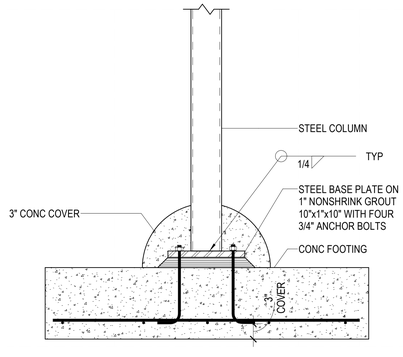

C4 S401 COOLING TOWER SUPPORT DETAIL

NO SCALE

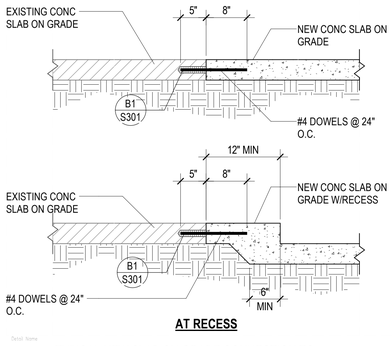

AT RECESS

C1 S401 TYPICAL NEW SLAB ON GRADE CONNECTION TO EXISTING CONCRETE SLAB ON GRADE

NO SCALE

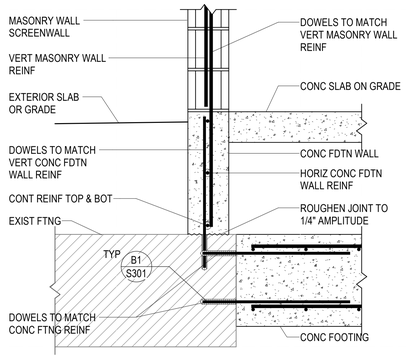

B2 S401 TYPICAL MASONRY SCREEN WALL ON FOUNDATION WALL

NO SCALE

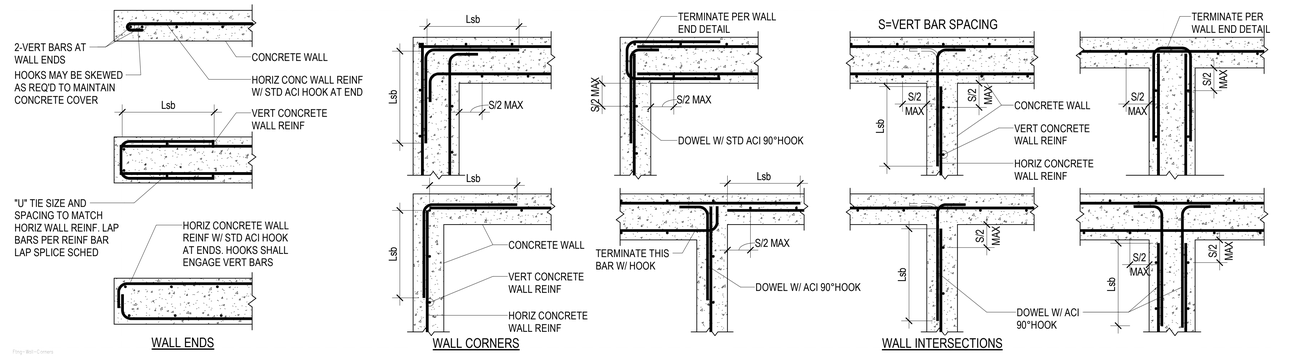

B3 S401 TYPICAL CONCRETE WALL REINFORCING AT ENDS, CORNERS AND INTERSECTIONS (PLAN VIEWS)

NO SCALE

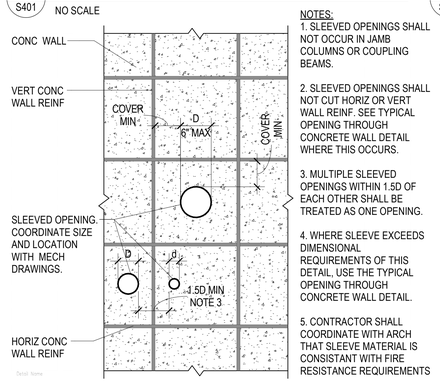

NOTES:

1. SLEEVED OPENINGS SHALL NOT OCCUR IN JAMB COLUMNS OR COUPLING BEAMS.
2. SLEEVED OPENINGS SHALL NOT CUT HORIZ OR VERT WALL REINF. SEE TYPICAL OPENING THROUGH CONCRETE WALL DETAIL WHERE THIS OCCURS.
3. MULTIPLE SLEEVED OPENINGS WITHIN 1.5D OF EACH OTHER SHALL BE TREATED AS ONE OPENING.
4. WHERE SLEEVE EXCEEDS DIMENSIONAL REQUIREMENTS OF THIS DETAIL, USE THE TYPICAL OPENING THROUGH CONCRETE WALL DETAIL.
5. CONTRACTOR SHALL COORDINATE WITH ARCH THAT SLEEVE MATERIAL IS CONSISTANT WITH FIRE RESISTANCE REQUIREMENTS

A1 S401 TYPICAL SLEEVED OPENING THROUGH CONCRETE WALL

NO SCALE

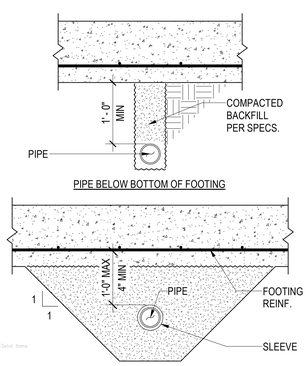

PIPE BELOW BOTTOM OF FOOTING

PIPE BELOW & CLOSE TO BOTTOM OF FOOTING

A2 S401 PIPES PENETRATING & ADJACENT TO FOOTINGS

NO SCALE

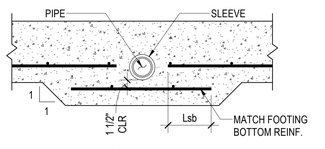

PIPE AT BOTTOM REINFORCING

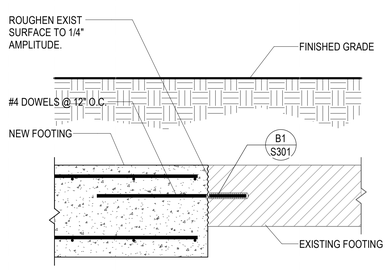

A4 S401 NEW FOOTING TO EXISTING FOOTING

NO SCALE

FFKR ARCHITECTS
730 Pacific Avenue · Salt Lake City, Utah 84104
O 801.521.6186 · FFKR.COM

Utah Fertility Center Outpatient Surgery Facility
1365 W Pleasant Grove Blvd, Pleasant Grove, UT 84062
UTAH FERTILITY CENTER
PERMIT SET - 03/12/2021

PROFESSIONAL STRUCTURAL ENGINEER
No. 7102977
JESSICA S. CHAPPELL
STATE OF UTAH

03/12/2021

△ DATE REVISION

PROJECT NUMBER 20087

FOOTING AND FDTN DETAIL SHEET

S401

3/12/2021 3:26:37 PM

REFERENCE NOTES

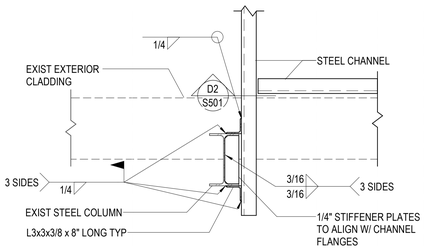

D1 S501 STEEL CHANNEL TO EXIST STEEL COLUMN CONNECTION

NO SCALE

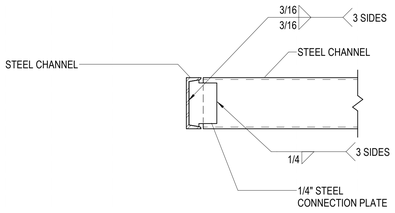

D2 S501 STEEL CHANNEL CONNECTION

NO SCALE

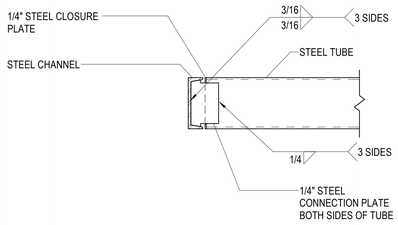

NOTE: STEEL DECK AND SUPPORTS TUBES NOT SHOWN FOR CLARITY

D3 S501 STEEL TUBE CONNECTION AT CANOPY

NO SCALE

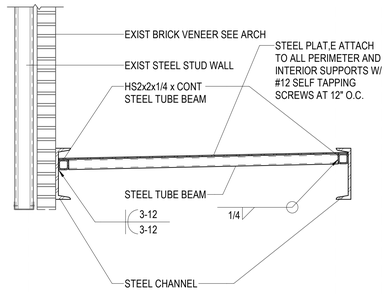

D4 S501 DETAIL AT CANOPY

NO SCALE

WHERE THE MECHANICAL UNIT WEIGHS LESS THAN 600#, THE L6x4x5/16 SUPPORT ANGLES MAY CHANGED TO L5x3x1/4 (LLV).
SOLID BLOCK THE FLUTES OF THE STEEL DECK BENEATH THE CURB OF THE MECHANICAL UNIT. THIS MAY BE DONE WITH A HSS1.1/2x1.1/2x1/4 x6" LONG TACK WELDED TO THE STEEL DECK OR WITH SOLID BLOCKING CONNECTED TO THE STEEL DECK.

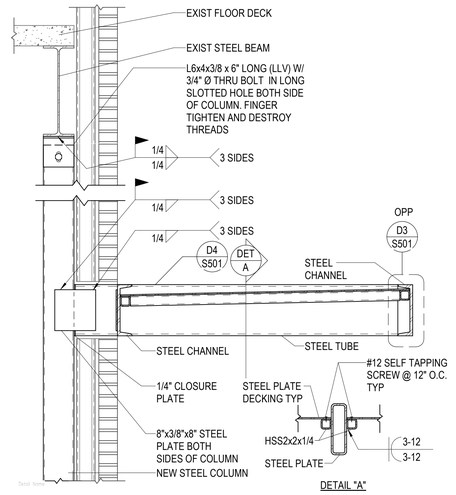

D5 S501 DETAIL AT CANOPY

NO SCALE

C1 S501 STEEL CHANNEL TO STEEL COLUMN CONNECTION

NO SCALE

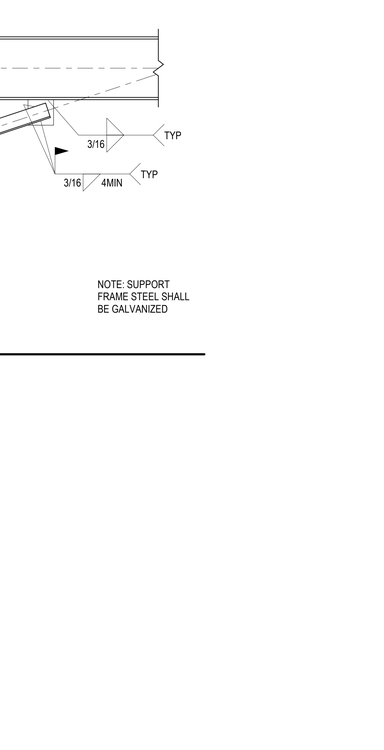

NOTE: SEE D5/S501 FOR CONNECTION AT TOP OF COLUMN

C2 S501 STEEL CHANNEL TO STEEL COLUMN CONNECTION

NO SCALE

C3 S501 HOUSEKEEPING PAD DETAIL

NO SCALE

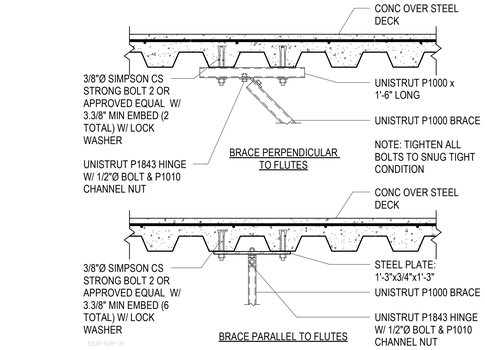

NOTE:
WELD STEEL DECK TO ANGLE FRAME

C4 S501 TYP MECHANICAL UNIT SUPPORT DETAIL (PLAN VIEW)

NO SCALE

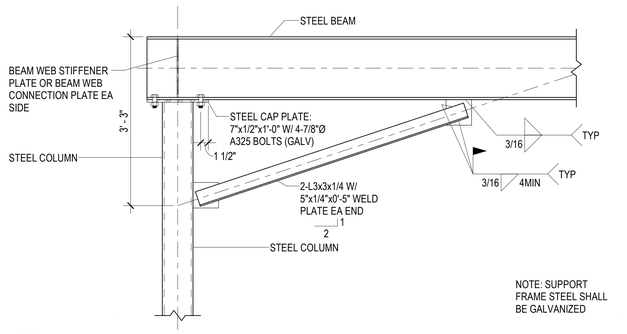

NOTE: SUPPORT FRAME STEEL SHALL BE GALVANIZED

B1 S501 COOLING TOWER SUPPORT DETAIL

NO SCALE

A4 S501 TYPICAL UNISTRUT CONNECTION TO CONC SLAB OVER FLOOR DECK

NO SCALE

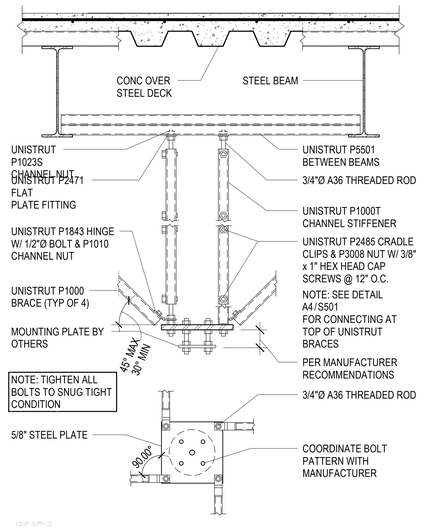

A5 S501 OPTIONAL SINGLE LIGHT SUPPORT FROM STRUCTURE(MAX 120 LB) TO BE USED IN EXAM ROOMS

NO SCALE

FFKR ARCHITECTS
730 Pacific Avenue · Salt Lake City, Utah 84104
O 801.521.6186 · FFKR.COM

Utah Fertility Center Outpatient Surgery Facility
1365 W Pleasant Grove Blvd, Pleasant Grove, UT 84062
UTAH FERTILITY CENTER
PERMIT SET - 03/12/2021

PROFESSIONAL STRUCTURAL ENGINEER No. 7102977 JESSICA S. CRAPPELL STATE OF UTAH

03/12/2021

△ DATE REVISION

PROJECT NUMBER 20087

DETAIL SHEET

S501

3/12/2021 3:26:38 PM

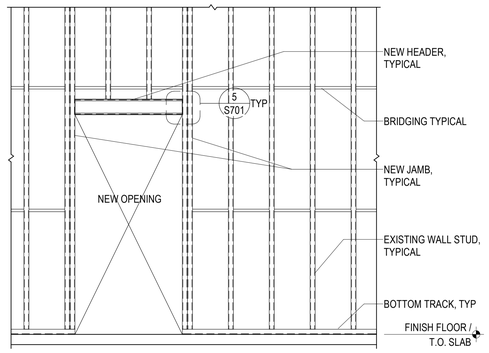

8 S701 EXTERIOR WALL OPENING ELEVATION

SCALE: 1/2" = 1'-0"

NON-LOAD BEARING EXTERIOR STEEL STUD FRAMING SCHEDULE						
				WALL MAXIMUM OPENING WIDTH	JAMB	HEADER
MAXIMUM WALL HEIGHT	STUD DESIGNATION	BOTTOM TRACK DESIGNATION	BRIDGING		JAMB OPTIONS	TYPE
16'-0"	600S162-54 @ 16" O.C.	600T125-54	REQUIRED @ 4'-0" O.C. VERTICAL SPACING	4'-4"	600S162-54 & 600T125-54 TYPE J2	600S162-54 & 2-600T125-54 TYPE H1
					2-600S162-54 TYPE M2	
				10'-8"	2-600S162-54 TYPE M2	2-800S162-54 & 2-600T125-54 TYPE H2

NOTES:
1. CONTRACTOR MAY CHOOSE BETWEEN THE SCREWED OR WELDED JAMB OPTIONS.
2. CONFIGURE STUD/TRACK COMBINATIONS FOR JAMBS, HEADERS AND SILLS PER TYPICAL DETAILS.
3. MULTIPLE STUD CONFIGURATIONS (M#) SHALL BE STITCH WELDED TOGETHER PER DETAILS.
4. FILL ALL HOLES IN CONNECTION HARDWARE WITH: HILTI X-U FASTENERS W/ 1.1/2" EMBEDMENT TO STRUCTURAL CONCRETE, HILTI X-U 15 FASTENERS TO STRUCTURAL STEEL, AND #12 SCREWS TO LIGHT GAUGE STEEL, OR ENGINEER APPROVED EQUIVALENT, U.N.O.
5. MAX OPENING HEIGHT FROM SILL TO HEADER IS 8'-0"
6. WALL HEIGHT IN SCHEDULE IS THE VERTICAL DISTANCE BETWEEN CONNECTIONS OF STUDS TO STRUCTURAL FLOORS, ROOFS, OR GIRTS.
7. A JAMB BETWEEN OPENINGS SHALL USE THECOMBINED WIDTH OF THE TWO OPENINGS AS THE OPENING WIDTH.
8. FRAME INTERIOR SHAFT WALL WITH 400CH-34 STUDS @ 24" O.C. SEE ARCH FOR LOCATION.

LOOSE STEEL ANGLE LINTEL SCHEDULE		
BEARING EQUALS 1" PER FOOT OF OPENING OR 6" MINIMUM TYPICAL		
	OPENING SIZE	ANGLE SIZE
	0'-0" - 7'-0"	L4x3.1/2x5/16
	7'-0" - 9'-0"	L6x3.1/2x3/8

NOTES:
LINTELS ARE DESIGNED TO SUPPORT UNIFORM LOADS CONSISTING ONLY OF WEIGHT OF WALL WITHIN A 60 DEGREE ISOSCELES TRIANGLE AREA ABOVE OPENING.

ALL STEEL LINTELS ARE TO HAVE LONG LEG VERTICAL.

LINTEL SCHEDULE FOR 4" VENEER

ALL ANGLE LINTELS SHALL BE GALVANIZED.

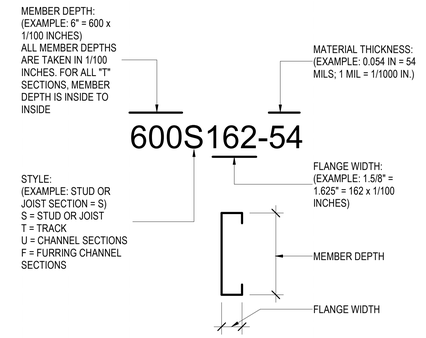

7 S701 STEEL STUD MANUFACTURERS ASSOCIATION - NOMENCLATURE

SCALE: 1" = 1'-0"

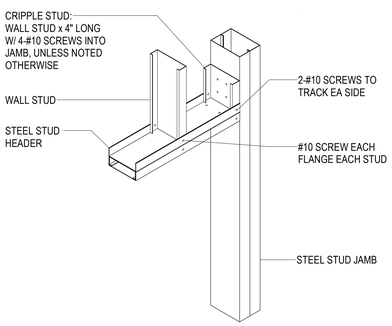

5 S701 TYPICAL HEADER CONNECTION DETAILS

SCALE: 1" = 1'-0"

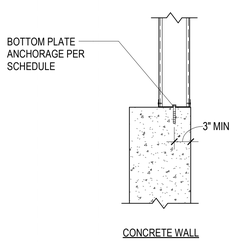

NOTE: PROVIDE SCREW ANCHOR WITHIN 4" OF ALL JAMB SUTDS

3 S701 BOTTOM TRACK ANCHORAGE

SCALE: 1" = 1'-0"

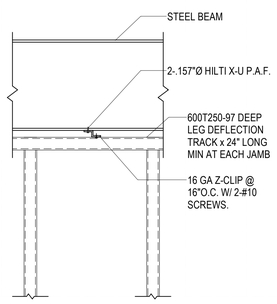

1 S701 TOP TRACK ANCHORAGE

SCALE: 1" = 1'-0"

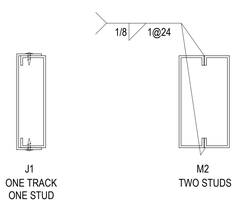

6 S701 TYPICAL STEEL STUD JAMB DETAILS

SCALE: 3" = 1'-0"

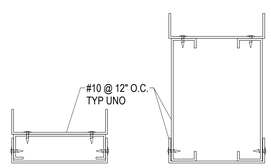

4 S701 TYPICAL STUD HEADER DETAILS

SCALE: 3" = 1'-0"

FFKR ARCHITECTS
730 Pacific Avenue · Salt Lake City, Utah 84104
O 801.521.6186 · FFKR.COM

Utah Fertility Center Outpatient Surgery Facility
1365 W Pleasant Grove Blvd, Pleasant Grove, UT 84062
UTAH FERTILITY CENTER
PERMIT SET - 03/12/2021

PROFESSIONAL STRUCTURAL ENGINEER No. 7102977 JESSICA S. CHAPPELL STATE OF UTAH

03/12/2021

△ DATE REVISION

PROJECT NUMBER 20087

DETAIL SHEET

S701

3/12/2021 3:26:38 PM

LEGEND OF MECHANICAL SYMBOLS AND ABBREVIATIONS

DUCTWORK/GRILLES

	POSITIVE PRESSURE DUCT - RISE
	POSITIVE PRESSURE DUCT - DROP
	NEGATIVE PRESSURE DUCT - RISE
	NEGATIVE PRESSURE DUCT - DROP
	ROUND DUCT - RISE
	ROUND DUCT - DROP
	UNDER FLOOR DUCT
	TURNING VANES
	FRESH AIR LOUVER
	RELIEF AIR OR EXHAUST AIR LOUVER
12X12 200	CEILING SUPPLY DIFFUSER
22X22 200	CEILING RETURN REGISTER
12X12 200	CEILING EXHAUST REGISTER, (BALANCE TO MATCH SUPPLY IF RETURN CFM IS NOT SHOWN)
24X10 200	SIDEWALL SUPPLY REGISTER
24X10 200	SIDEWALL EXHAUST OR RETURN REGISTER
12X12 200	CEILING SUPPLY DIFFUSER WITH FLEXIBLE DUCT
12X12 200	CEILING AIR GRILLE WITH FLEXIBLE DUCT

TOP FIGURES INDICATE NECK SIZE. BOTTOM FIGURE INDICATES CFM.

	CEILING RETURN AIR GRILE W/ SOUND BOOT
	FLEXIBLE DUCT CONNECTION
	FLEXIBLE DUCT
12/8	RECTANGULAR DUCT WITH NET INSIDE DIMENSIONS SHOWN IN INCHES.
12ø	ROUND DUCT WITH NET INSIDE DIMENSIONS SHOWN IN INCHES.
UP	INCLINED RISE
DN	INCLINED DROP

WITH RESPECT TO AIR FLOW 15° NOMINAL INCLINE WITH RADIUS TURNS=DEPTH OF DUCT.

W R	R/W=1. ROUND DUCT SIMILAR TO RECTANGULAR
12/12 8/8	RECTANGULAR TO RECTANGULAR OR ROUND TO ROUND DUCT TRANSFORMATION MAXIMUM 15° INCLUDED ANGLE EXCEPT WHERE SHOWN OTHERWISE.
12/12 12ø	RECTANGULAR TO ROUND DUCT TRANSFORMATION
R 6	BRANCH DUCT SPLIT WITH 6" WIDTH AND MIN. R=WIDTH OF BRANCH DUCT DOWNSTREAM. ELBOW TURNING VANE OPTIONAL.
1.5D 2.5D 45° D D	TAP ENTRY AREA EQUALS 150% OF BRANCH AREA
12/0 12/12	HIGH EFFICIENCY FITTING
	MANUAL VOLUME DAMPER
BDD	BACK DRAFT DAMPER
ATC OR	ATC DAMPER
AD	ACCESS PANEL IN DUCT OR PLENUM
	HEATING OR COOLING COIL IN DUCT
	4-WAY BLOW PATTERN
	3-WAY BLOW PATTERN
	2-WAY BLOW PATTERN
	2-WAY BLOW PATTERN
	1-WAY BLOW PATTERN

PIPING

OR	SHUT OFF VALVE
OR	BALL VALVE
OR	CHECK VALVE
OR	LATERAL STRAINER WITH BLOW-OFF VALVE, PROVIDE HOSE END WITH CAP WHERE DISCHARGE IS NOT PIPED TO DRAIN
F&T	F&T=FLOAT & THERMOSTATIC
RPBP	REDUCED PRESSURE BACKFLOW PREVENTOR W/ DRAIN PAN
0.0 GPM OR	CALIBRATED BALANCING VALVE WITH GPM INDICATED
	BRANCH - BOTTOM CONNECTION
	BRANCH - TOP CONNECTION
	BRANCH - SIDE CONNECTION
	RISE OR DROP
	RISER - DOWN (ELBOW)
	RISER - UP (ELBOW)
	PIPE CAP
	ARROW INDICATES DIRECTION OF FLOW IN PIPE
DN	LEADER INDICATES DOWNWORD SLOPE
	VALVE IN RISE
OR	90° ELBOW
	45° ELBOW

PLUMBING

	FLOOR SINK
	FLOOR DRAIN
FCO COTG	FLOOR CLEAN-OUT OR CLEAN-OUT TO GRADE
	ROOF DRAIN
	DOWNSPOUT NOZZLE
VTR	VENT THRU ROOF
	WATER HAMMER ARRESTOR
	CLEAN-OUT
(NAME)	FIXTURE FROM LEVEL ABOVE

FIRE

	HOSE VALVE
	NRS GATE VALVE WITH SUPERVISION
	FLOW SWITCH
	FIRE RISER
	SPRINKLER HEAD
F	FIRE SPRINKLER WATER
	PREACTION SYSTEM VALVE

ANNOTATIONS

P-1	PLUMBING FIXTURES
	POINT OF CONNECTION
A M-101	SECTION TAG - TOP FIGURE IS SECTION NO. BOTTOM FIGURE IS SHEET NO.
A M101	DETAIL TAG - TOP FIGURE IS DETAIL NO. BOTTOM FIGURE IS SHEET NO.
EF 1	EQUIPMENT IDENTIFICATION
1	KEYED NOTE IDENTIFICATION
	PRESSURE MONITOR
(P)	PRESSURE MONITOR
(T)	THERMOSTAT

LINETYPES

	DOMESTIC COLD WATER (DCW)
	DOMESTIC HOT WATER (DHW)
	DOMESTIC HOT WATER RETURN (DHWR)
DI	DIONIZED WATER SUPPLY
LPS	LOW PRESSURE STEAM
	SEWER (BELOW GRADE)
	SEWER (ABOVE GRADE)
TW	TEMPID WATER
	VENT (SEWER)

FFKR ARCHITECTS
730 Pacific Avenue - Salt Lake City, Utah 84104
O 801.521.0186 - FFKR.COM

VBFA www.VBFA.com
Mark Vorwaller Jason Trimble
181 East 6965 South 801.530.3148 T
Murray, UT 84107 801.530.3150 F
VBFA Project Number: 20486

Utah Fertility Center Outpatient Surgery Facility
1365 W Pleasant Grove Blvd, Pleasant Grove, UT 84062
UTAH FERTILITY CENTER
CONSTRUCTION DOCUMENTS - 12.MAR.2021

REGISTERED PROFESSIONAL ENGINEER
No. 11599476-2202
DALLEN BLAIR ROMRIELL
03.12.2021
STATE OF UTAH

△ DATE REVISION

PROJECT NUMBER 20087

MECHANICAL SYMBOLS AND LEGEND

ME000

3/12/2021 1:37:21 PM

MEDICAL GAS GENERAL NOTES

1. MEDICAL GAS PIPING IS TO BE RUN ABOVE THE CEILING, UNLESS NOTED OTHERWISE. COORDINATE PIPING ROUTING WITH ALL OTHER POSSIBLE CONFLICTS SUCH AS DUCTWORK, DIFFUSERS, OTHER PIPING, LIGHTS, CONDUIT, STRUCTURE, ETC.
2. ALL PIPE AND DUCT SIZES SHALL REMAIN THE SAME SIZE SHOWN, IN THE DIRECTION OF FLOW, UNTIL SHOWN OTHERWISE.
3. SLEEVE PIPING THRU WALLS/FOUNDATIONS WHERE REQUIRED.
4. MEDICAL GAS PIPING IS SCHEMATIC IN NATURE. FIELD VERIFY EXACT PIPE ROUTING AND COORDINATE WITH ALL OTHER TRADES.
5. NO PIPING TO RUN OVER ELECTRICAL PANELS, VFD'S OR MCC'S. PROTECT EQUIPMENT WITH A 42" DEEP ZONE IN FRONT OF PANELS, VFD'S, AND MCC'S.
6. MOUNT ALL SERVICE VALVES NEAR CEILING HEIGHT FOR ACCESSIBILITY.

FIRE PROTECTION GENERAL NOTES

1. NO FIRE PROTECTION LINE SHALL BE DESIGNED OR INSTALLED PRIOR TO CLOSE COORDINATION WITH ALL OTHER DISCIPLINES. DUCTWORK, MECHANICAL PIPING AND PLUMBING TAKE SPACE PRECEDENCE OVER FIRE PROTECTION PIPING. FAILURE TO COMPLY WILL RESULT IN THE FIRE PROTECTION REMOVAL AND REINSTALLATION AT THE FIRE PROTECTION CONTRACTORS EXPENSE.
2. ALL WORK DONE SHALL BE PERFORMED WITH WATER CONTROL IN MIND. CONTAINMENT OF WATER IS NECESSARY TO PREVENT WATER FROM DAMAGING SURROUNDING AREA.
3. COORDINATE EXACT LOCATION OF PIPING WITH STRUCTURAL MEMBERS, LIGHTS, REFLECTED CEILING PLANS, CABLE TRAY, ELECTRICAL CONDUITS, DUCTWORK, MECHANICAL AND PLUMBING PIPING, AND ALL OTHER TRADES AND ALL EXISTING CONDITIONS.
4. FIRE SUPPRESSION CONTRACTOR SHALL BE RESPONSIBLE TO REMOVE AND/OR REROUTE ANY AND ALL FIRE PROTECTION PIPING, VALVING, SUPPORTS OR SYSTEMS, OTHERWISE WITHIN THE FIRE SUPPRESSION DISCIPLINE REGARDLESS OF WHO INSTALLED THEM OR WHEN THEY WERE INSTALLED, IN ORDER TO ACCOMMODATE MECHANICAL, PLUMBING, ELECTRICAL OR OTHER SYSTEMS. COORDINATE WORK WITH MECHANICAL, ELECTRICAL, PLUMBING OR OTHER CONTRACTORS UNTIL SUBSTANTIAL COMPLETION OF PROJECT.

PLUMBING GENERAL NOTES

1. UNLESS OTHERWISE NOTED, SLOPE PIPE AS FOLLOWS: WASTE BRANCHES: 1/4" PER FOOT; WASTE MAINS: 1/4" PER FOOT; ROOF DRAIN/ROOF DRAIN OVERFLOW: 1/8" PER FOOT.
2. ALL WORK DONE SHALL BE PERFORMED WITH WATER CONTROL IN MIND. CONTAINMENT OF WATER IS NECESSARY TO PREVENT WATER FROM DAMAGING AREAS ON FLOORS BELOW.
3. PLUMBING DRAWINGS ARE SCHEMATIC IN NATURE. FIELD VERIFY EXACT PIPE ROUTING AND COORDINATE WITH ALL OTHER TRADES.
4. ALL PIPING IN PLUMBING CHASES SHALL BE ARRANGED TO ALLOW MAINTENANCE ACCESS.
5. NO PIPING TO RUN OVER ELECTRICAL PANELS, VFD'S OR MCC'S. PROTECT EQUIPMENT WITH A 42" DEEP ZONE IN FRONT OF PANELS, VFD'S, AND MCC'S.
6. COORDINATE FAN ROOM FLOOR DRAIN AND FLOOR SINK LOCATIONS WITH COOLING COIL, EVAPORATIVE SECTION, AND HEATING COIL LOCATIONS.
7. CONTRACTOR TO PROVIDE VALVE IDENTIFICATION AND LOCATION ON ALL CEILING TILES WHERE VALVES ARE LOCATED.
8. PIPING AND ROUTING SHOWN, INCLUDING ALL BELOW FLOOR DECK PIPING, IS APPROXIMATE. IT IS UP TO THE CONTRACTOR TO FIELD VERIFY THE EXACT LOCATION AND SIZE OF ALL PIPING.
9. REFER TO ARCHITECTURAL DRAWINGS FOR FIXTURE MOUNTING HEIGHTS, DIMENSIONS, AND OTHER REQUIREMENTS.
10. CONTRACTOR TO VERIFY CONNECTION SIDE OF ADA FIXTURES AND ADJUST ACCORDINGLY. INSTALL FLUSH VALVES HANDLES ON WIDE SIDE OF ALL FIXTURES.
11. LOCATE ALL VENTS MINIMUM 25' AWAY FROM AIR INTAKES.
12. INSTALL ALL DOMESTIC WATER LINES BELOW DUCTWORK.
13. INSTALL A 24" X 24" ACCESS DOOR BELOW ALL ISOLATION VALVES, BALANCING VALVES AND WATER HAMMER ARRESTORS WHERE MOUNTED ABOVE HARD CEILINGS.
14. MOUNT ALL ISOLATION VALVES, CONTROL VALVES, BALANCING VALVES, ETC. NEAR CEILING HEIGHT FOR ACCESSIBILITY.
15. INSTALL ALL EQUIPMENT WITH SUFFICIENT CLEARANCE FOR MAINTENANCE PER MANUFACTURERS RECOMMENDATION.
16. COORDINATE ALL FLOOR PENETRATIONS WITH STRUCTURAL AND PROVIDE SLEEVES AS NECESSARY.
17. COORDINATE EXACT LOCATION OF PLUMBING WITH STRUCTURAL MEMBERS, LIGHTS, REFLECTED CEILING, CABLE TRAY, DUCTWORK, MECHANICAL PIPING, MEDICAL GASES, FIRE PROTECTION AND OTHER TRADES, TYPICAL.
18. COORDINATE THE LOCATION OF THE FLOOR DRAIN, SHOWER DRAIN, OR FLOOR SINK WITH ARCHITECTURAL AND STRUCTURAL, TYPICAL.
19. ACCESS DOORS SHALL BE PROVIDED TO ALL WATER HAMMER ARRESTORS IN WALLS OR ABOVE CEILINGS.
20. SEE PLUMBING FIXTURE SCHEDULE FOR PIPE SIZES OF WASTE, VENT AND DOMESTIC WATER TO/FROM SINGLE FIXTURE.
21. HOSE BIBBS SHOWN AT LAVATORIES ARE TO BE MOUNTED AT AN ACCESSIBLE LOCATION UNDER THE LAVATORY.
22. COORDINATE EXACT LOCATION OF PLUMBING PIPING WITH STRUCTURAL MEMBERS, LIGHTS, REFLECTED CEILING PLANS, CABLE TRAY, ELECTRICAL CONDUITS, DUCTWORK, MECHANICAL AND FIRE PROTECTION PIPING, AND ALL OTHER TRADES AND ALL EXISTING CONDITIONS.
23. LOCATE CIRCUIT SETTERS, VALVES, WATER HAMMER ARRESTORS, ETC. IN ACCESSIBLE LOCATIONS. PROVIDE 24"X24" ACCESS PANEL WHERE ITEM IS LOCATED ABOVE A HARD CEILING.
24. ALL PIPE AND DUCT SIZES SHALL REMAIN THE SAME SIZE SHOWN, IN THE DIRECTION OF FLOW, UNTIL SHOWN OTHERWISE.
25. INSTALL CLEANOUTS IN DRAIN PIPING AS INDICATED, AND WHERE NOT INDICATED, ACCORDING TO THE FOLLOWING.

    a) SIZE SAME AS DRAINAGE PIPING UP TO 4" NPS. USE 4" NPS FOR LARGER DRAINAGE PIPING UNLESS LARGER CLEANOUT IS INDICATED.

    b) LOCATE AT MINIMUM INTERVALS OF 50 FT FOR PIPING 4" NPS AND SMALLER AND 100 FT FOR LARGER PIPING.

    c) LOCATE AT THE BASE OF EACH VERTICAL STACK.

MECHANICAL PIPING GENERAL NOTES

1. PROVIDE ALL MATERIALS AND EQUIPMENT AND PERFORM ALL LABOR REQUIRED TO INSTALL COMPLETE AND OPERABLE PIPING SYSTEMS AS INDICATED ON THE DRAWINGS, AS SPECIFIED AND AS REQUIRED BY CODE.
2. UNLESS OTHERWISE NOTED: ALL MECHANICAL PIPING IS OVERHEAD TO RUN ABOVE DUCTWORK AND TIGHT TO UNDERSIDE OF STRUCTURE.
3. WHERE VALVING OR EQUIPMENT IS LOCATED ABOVE HARD CEILINGS PROVIDE AN ACCESS DOOR IN CEILING. MINIMUM ACCESS DOOR SIZE OF 24"X24".
4. NO PIPING TO RUN OVER ELECTRICAL PANELS, VFD'S OR MCC'S. PROTECT EQUIPMENT WITH A 42" DEEP ZONE IN FRONT OF PANELS, VFD'S, AND MCC'S.
5. SLEEVE PIPING THRU WALLS/FOUNDATIONS WHERE REQUIRED.
6. INSTALL PIPING SO THAT ALL VALVES, STRAINERS, UNIONS, TRAPS, FLANGES, AND OTHER APPURTENANCES REQUIRING ACCESS ARE ACCESSIBLE.
7. ALL VALVES SHALL BE INSTALLED SO THAT VALVE REMAINS IN SERVICE WHEN EQUIPMENT OR PIPING ON EQUIPMENT SIDE OF VALVE IS REMOVED.
8. PROVIDE AN AIR VENT AT THE HIGH POINT OF EACH DROP IN THE HEATING AND CHILLED WATER PIPING SYSTEM.
9. INSTALL ALL PIPING WITHOUT FORCING OR SPRINGING.
10. ALL VALVES SHALL BE ADJUSTED FOR SMOOTH AND EASY OPERATION.
11. PROVIDE ISOLATION VALVES AT EACH EXIT/ENTRANCE INTO SHAFT WHETHER OR NOT SHOWN.
12. ALL PIPE AND DUCT SIZES SHALL REMAIN THE SAME SIZE SHOWN, IN THE DIRECTION OF FLOW, UNTIL SHOWN OTHERWISE.
13. COORDINATE LOCATION OF THERMOSTAT WITH ARCHITECTURAL FURNISHING PLANS. MOUNT THERMOSTAT AT HEIGHT AS SPECIFIED ON ARCHITECTURAL.
14. CONTRACTOR TO PROVIDE VALVE IDENTIFICATION AND LOCATION ON ALL CEILING TILES WHERE VALVES ARE LOCATED.

MECHANICAL GENERAL NOTES

1. COORDINATE EXACT PLACEMENT OF DIFFUSERS, GRILLES, AND REGISTERS WITH ARCHITECTURAL REFLECTED CEILING PLAN, TYPICAL.
2. SEE DETAIL FOR DIFFUSER CONNECTIONS TO DUCTWORK, TYPICAL.
3. BRANCH DUCTWORK SHALL BE SIZED TO MATCH THE NECK INLET SIZE OF THE DIFFUSERS, REGISTER OR GRILLE IT SERVES UNLESS NOTED OTHERWISE, TYPICAL.
4. COORDINATE EXACT MOUNTING LOCATION OF ALL THERMOSTATS WITH LATEST REVISION OF ARCHITECTURAL ELEVATION AND FURNISHINGS PLANS, TYPICAL.
5. THE MECHANICAL CONTRACTOR SHALL BE RESPONSIBLE FOR CAULKING AND SEALING ALL PENETRATIONS IN FIRE AND SMOKE RATED PARTITIONS TO MAINTAIN RATINGS. SEE SPECIFICATION, TYPICAL.
6. THE MECHANICAL CONTRACTOR SHALL PROVIDE FIRE, SMOKE OR COMBINATION FIRE/SMOKE DAMPERS AT ALL LOCATIONS SHOWN ON THE CONTRACT DOCUMENTS AND AS REQUIRED TO MEET THE INTEGRITY OF ALL SMOKE AND FIRE PARTITIONS. THE CONTRACTOR SHALL REFER TO THE LATEST ARCHITECTURAL LIFE SAFETY PLANS FOR ALL FIRE AND SMOKE PARTITION LOCATIONS. DAMPERS ARE TO BE PROVIDED WITH SHUTOFF/TEST SWITCH AT EACH LOCATION.
7. PROVIDE AND INSTALL TURNING VANES IN ALL SQUARE LOW PRESSURE DUCTWORK AT ELBOWS OR TEES, TYPICAL.
8. INSTALL ALL TERMINAL BOXES IN EASILY ACCESSIBLE AND SERVICEABLE LOCATIONS, MEETING ALL MANUFACTURERS REQUIRED CLEARANCES ON EACH SIDE. SEE DETAILS, TYPICAL.
9. CONTRACTOR SHALL OFF-SET, TRANSITION AND PROVIDE CHANGES AS REQUIRED FOR COORDINATION WITH OTHER TRADES, TYPICAL.
10. DUCTWORK SIZES SHOWN ARE INSIDE CLEAR DIMENSIONS. REFER TO MECHANICAL SPECIFICATIONS FOR EXTENT OF DUCT INSULATION AND LINER.
11. PROVIDE AND INSTALL REMOTE DAMPER OPERATORS FOR ALL DAMPERS INSTALLED ABOVE INACCESSIBLE CEILINGS, SEE MECHANICAL SPECIFICATIONS FOR EQUIPMENT REQUIREMENTS, TYPICAL.
12. PROVIDE AND INSTALL HIGH EFFICIENCY TAKE-OFF FITTINGS AND BALANCING DAMPER AT ALL BRANCH CONNECTIONS TO LOW PRESSURE DUCTWORK.
13. PROVIDE AND INSTALL HIGH EFFICIENCY OR CONICAL TAKE-OFFS AT ALL BRANCH CONNECTIONS TO MEDIUM PRESSURE DUCTWORK.
14. WHERE DUCTWORK CROSSES, SUPPLY DUCTWORK IS USUALLY BELOW RETURN AND EXHAUST DUCT. RETURN DUCTWORK IS USUALLY BELOW EXHAUST DUCTS.
15. AT LOCATIONS WHERE DIFFUSERS OR GRILLES ARE UNDER DUCTWORK, CONTRACTOR TO FABRICATE TRANSITION BOOT FROM FLEX CONNECTION TO DIFFUSER OR GRILLE WITH BALANCING DAMPER, TYPICAL.
16. THE MECHANICAL CONTRACTOR SHALL PROVIDE CEILING MOUNTED ACCESS DOORS FOR ALL FIRE, SMOKE AND COMBINATION FIRE/SMOKE DAMPERS INSTALLED ABOVE INACCESSIBLE CEILING. FIELD VERIFY EXACT INSTALLATION LOCATIONS PRIOR TO COMMENCING WORK AND COORDINATE INSTALLATIONS WITH LATEST ARCHITECTURAL REFLECTED CEILING PLANS.
17. MECHANICAL CONTRACTOR SHALL ENSURE THAT ALL EQUIPMENT IS PROVIDED AND INSTALLED WITH CLEARANCES PER MANUFACTURERS RECOMMENDATIONS. THE CONTRACTOR SHALL MAINTAIN PROPER SERVICE SPACE FOR COIL PULLS, BAS DEVICES, MAINTENANCE ACCESS, ETC.
18. ALL VAV BOXES TO HAVE REHEAT COILS, EXCEPT AS NOTED. PROVIDE A MINIMUM OF TWO DUCT DIAMETERS OF STRAIGHT ROUND DUCT TO INLET OF VAV BOX. BOX SHALL BE HARD CONNECTED (CONICAL) TO MEDIUM PRESSURE DUCT, TYPICAL.
19. PROVIDE ACCESS DOORS TO ACCESS VAV BOX CONTROLS ABOVE HARD CEILINGS. PROVIDE MIN. 24" X 24".
20. ALL PIPE AND DUCT SIZES SHALL REMAIN THE SAME SIZE SHOWN, IN THE DIRECTION OF FLOW, UNTIL SHOWN OTHERWISE.
21. ALL DUCTWORK ABOVE HARD CEILINGS SHALL BE EXTENDED ALL THE WAY TO THE SUPPLY DIFFUSERS, RETURN GRILLS OR EXHAUST GRILLS WHETHER OR NOT HARD DUCT OR FLEX DUCT IS SHOWN ON PLANS. FLEX DUCT WILL NOT BE ALLOWED TO DIFFUSERS OR GRILLS ABOVE HARD CEILINGS. FLEX DUCT WILL BE REQUIRED IN AREAS ABOVE T-BAR CEILINGS.
22. NEW DUCTWORK, PIPING AND EQUIPMENT SHALL BE COORDINATED WITH STRUCTURE, LIGHTS, REFLECTED CEILING PLANS, CABLE TRAY, ELECTRICAL CONDUIT, PLUMBING, MECHANICAL AND FIRE PROTECTION PIPING, MEDICAL GASES, ALL OTHER TRADES AND ALL OTHER EXISTING CONDITIONS.
23. THE CONTRACTOR SHALL INFORM THE DESIGNER OF ANY PROPOSED DEVIATIONS FROM THE CONTRACT DOCUMENTS.
24. PROVIDE ACCESS TO ALL TEMPERATURE CONTROLS ABOVE CEILING. LOCATE IN ACCESSIBLE LOCATION. WHERE THERE ARE HARD CEILINGS THE CONTRACTOR SHALL PROVIDE 24"X24" ACCESS DOOR.
25. ALL DIFFUERS/REGISTERS/GRILLES ARE: CD-1, EG-1, RG-1, SWS-1, SWR-1, OR SWE-1, UNLESS OTHERWISE NOTED.

FFKR ARCHITECTS
730 Pacific Avenue - Salt Lake City, Utah 84104
O 801.521.0186 - FFKR.COM

VBFA www.vbfa.com
Mechanical Engineers
181 East 6965 South
Murray, UT 84107
801.530.3148 T
801.530.3150 F
VBFA Project Number: 20486

Utah Fertility Center Outpatient Surgery Facility
1365 W Pleasant Grove Blvd, Pleasant Grove, UT 84062
UTAH FERTILITY CENTER
CONSTRUCTION DOCUMENTS - 12.MAR.2021

REGISTERED PROFESSIONAL ENGINEER
No. 11599476-2202
DALLEN BLAIR ROMRELL
03.12.2021
STATE OF UTAH

△ DATE REVISION

PROJECT NUMBER 20087

MECHANICAL GENERAL NOTES

ME001

3/12/2021 1:37:22 PM

1 MECHANICAL ZONING PLAN LEVEL 1

SCALE: 1/4" = 1'-0"

REFERENCE NOTES

1. PROVIDE HUMIDISTAT AND INTERCONNECT TO SG-1.
2. PROVIDE HUMIDISTAT AND INTERCONNECT TO HU-1.
3. LOCATION OF EXISTING OXIMETER. INTERCONNECT TO EF-5

FFKR ARCHITECTS
730 Pacific Avenue - Salt Lake City, Utah 84104
O 801.521.6186 - FFKR.COM

VBFA
Murray - Logan - St. George - Tempe
181 East 5600 South
Murray, UT 84107
VBFA Project Number: 20405
801.530.3148 T
801.530.3150 F

Utah Fertility Center Outpatient Surgery Facility
1365 W Pleasant Grove Blvd, Pleasant Grove, UT 84062
UTAH FERTILITY CENTER
CONSTRUCTION DOCUMENTS - 12.MAR.2021

REGISTERED PROFESSIONAL ENGINEER
No. 11599476-2202
DALLEN BLAIR ROMRIELL
03.12.2021
STATE OF UTAH

△	DATE	REVISION

PROJECT NUMBER 20087

MECHANICAL ZOING/ PRESSURIZATION PLAN LEVEL 1

MZ101

3/12/2021 1:37:49 PM

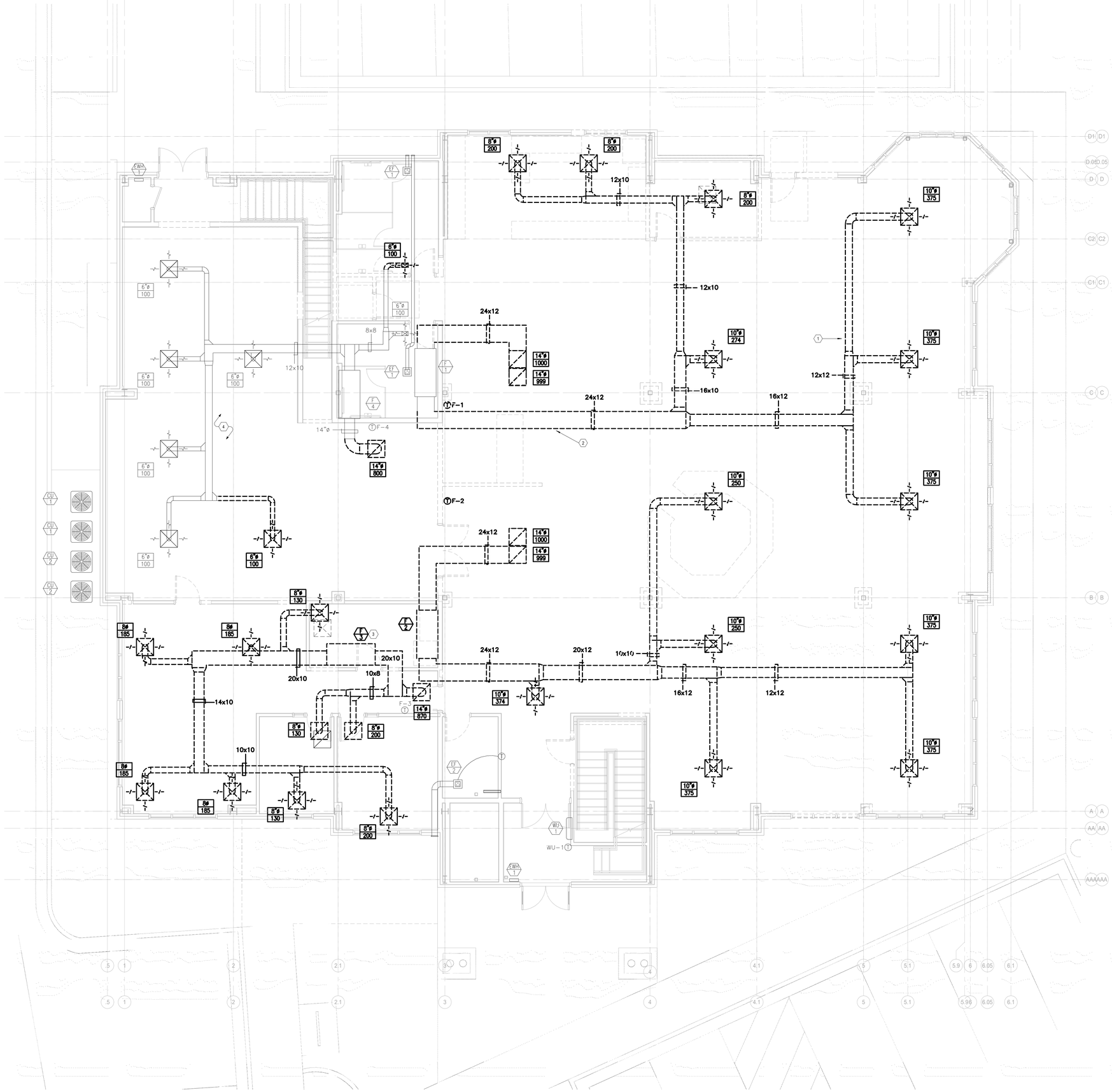

1 MECHANICAL DEMO PLAN LEVEL 1

SCALE: 1/4" = 1'-0"

REFERENCE NOTES

1. EXISTING ELEMENTS SHOWN DARK AND DASHED TO BE DEMOLISHED, TYPICAL.
2. EXISTING ELEMENTS SHOWN LIGHTER TO REMAIN, TYPICAL.
3. RELOCATE EXISTING FURNACE (F-3) TO NEW LOCATION SHOWN ON MH101. RELOCATE EXISTING OUTSIDE AIR CONNECTION. RELOCATE ALL COMPONENTS ASSOCIATED WITH THE FURNACE INCLUDING BUT NOT LIMITED TO: HANGER SUPPORTS, DRAIN ACCESSORIES, REFRIGERANT PIPING, AND CONDENSATE PIPING.
4. CAREFULLY PULL DUCTWORK DOWN IN THIS ROOM SO THAT RATED WALLS AND CEILINGS CAN BE INSTALLED. REINSTALL SAME DUCTWORK IN SAME LOCATION.

FFKR ARCHITECTS
730 Pacific Avenue - Salt Lake City, Utah 84104
O 801.521.6186 - FFKR.COM

VBFA
WWW.VBFA.COM
Murray - Logan - St. George - Tempe
181 East 5600 South 801.533.3148 T
Murray, UT 84107 801.530.3150 F
VBFA Project Number: 20405

Utah Fertility Center Outpatient Surgery Facility
1365 W Pleasant Grove Blvd, Pleasant Grove, UT 84062
UTAH FERTILITY CENTER
CONSTRUCTION DOCUMENTS - 12.MAR.2021

REGISTERED PROFESSIONAL ENGINEER
No. 11599476-2202
DALLEN BLAIR ROMRIELL
03.12.2021
STATE OF UTAH

△	DATE	REVISION

PROJECT NUMBER 20087

MECHANICAL DEMO PLAN LEVEL 1

MD101

3/12/2021 1:37:20 PM

REFERENCE NOTES

1. EXISTING ELEMENTS SHOWN LIGHT, TYPICAL.
2. BALANCE AIRFLOW TO 725 CFM.
3. BALANCE AIRFLOW TO 625 CFM.
4. BALANCE AIRFLOW TO 1955 CFM.
5. RELOCATE EXISTING OUTSIDE AIR CONNECTION. BALANCE TO EXISTING AIRFLOW (120 CFM). RELOCATE ALL COMPONENTS ASSOCIATED WITH THE FURNACE INCLUDING BUT NOT LIMITED TO: HANGER SUPPORTS, DRAIN ACCESSORIES, REFRIGERANT PIPING, AND CONDENSATE PIPING.
6. INSTALL BOTTOM OF GRILLE 8 INCHES A.F.F.
7. BALANCE AIRFLOW TO 1160 CFM.
8. CONTROLS CONTRACTOR SHALL PROVIDE NEW CONTROLS FOR EXISTING FURNACES F-1,F-3, F-4 AND SHALL TIE THEM INTO THE NEW BMS.
9. RELOCATE EXISTING DIFFUSER AND EXTEND DUCTWORK TO NEW DIFFUSER LOCATION.
10. REINSTALL DUCTWORK PER THE EXISTING CONDITIONS AFTER RATED WALLS AND CEILINGS HAVE BEEN INSTALLED. BALANCE TO EXISTING AIRFLOWS.
11. RISE DUCT IN BEAM POCKET.
12. PROVIDE FILTER HOUSING WITH STAND PROVIDED BY MECHANICAL CONTRACTOR.
13. DUCTS INSTALLED OUTSIDE TO BE Q-DUCT OR EQUIVALENT, TYPICAL.
14. PROVIDE MIRO DUCT SUPPORTS OR EQUIVALENT, TYPICAL.
15. INSTALL NEW FIRE DAMPER IN EXISTING DUCTWORK.
16. DUCT REQUIRED TO BE FIRE WRAPPED FROM THE FIRE DAMPER TO WHERE THE DUCT DISCHARGES.
17. EXTEND VENT WITH DOUBLE WALL STAINLESS STEEL PRE-MANUFACTURED VENT DUCT. ROUTE VENT OVER TO WALL AND ATTACH TO WALL BEFORE RUNNING UP. VENT SHALL MEASURE AT A MINIMUM OF 3 FEET ABOVE AH-1 OUTDOOR AIR INTAKE.
18. COORDINATE FINAL CONNECTION TO MONOFLEX SYSTEM. REFER TO SPECIFICATIONS FOR INTEGRATED CEILING REQUIREMENTS.
19. INTEGRATED CEILING SHALL BE DESIGNED AT 1020 CFM WITH 36 SF OF ACTIVE LAMINAR DIFFUSER AREA.
20. EXTEND DUCT TO FLOOR. INSTALL BOTTOM OF GRILLE AT 12" A.F.F.

1 MECHANICAL PLAN LEVEL 1

SCALE: 1/4" = 1'-0"

FFKR ARCHITECTS
730 Pacific Avenue - Salt Lake City, Utah 84104
O 801.521.0100 - FFKR.COM

VBFA www.VBFA.com
Mark Logan Dr. Kevin Thorpe
181 East 5900 South 801.530.3148 T
Murray, UT 84107 801.530.3150 F
VBFA Project Number: 20486

Utah Fertility Center Outpatient Surgery Facility
1365 W Pleasant Grove Blvd, Pleasant Grove, UT 84062
UTAH FERTILITY CENTER
CONSTRUCTION DOCUMENTS - 12.MAR.2021

LICENSED PROFESSIONAL ENGINEER
No. 11599476-2202
DALLEN BLAIR ROMRIELL
03.12.2021
STATE OF UTAH

△ DATE REVISION

PROJECT NUMBER 20087

MECHANICAL PLAN LEVEL 1

MH101

3/12/2021 1:37:33 PM

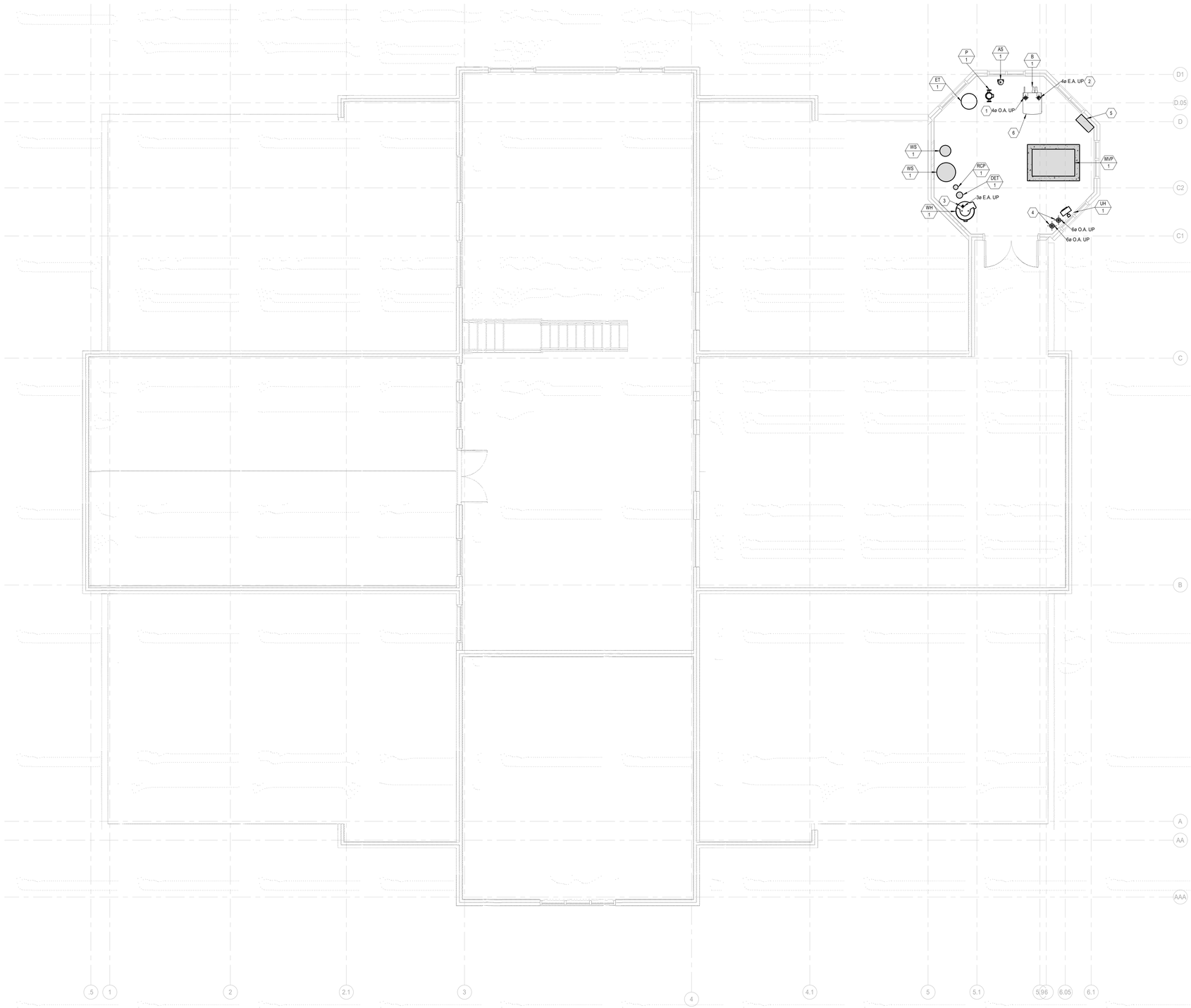

REFERENCE NOTES

1. EXHAUST VENT REQUIRED TO BE 3 FEET ABOVE TOP OF INTAKE DUCTS AND 2 FEET ABOVE ROOF RIDGE. TERMINATE EXHAUST WITH T FITTING. CONTRACTOR RESPONSIBLE FOR KNOWING AND FOLLOWING ALL RECOMMENDATIONS PROVIDED IN THE AERCO AM SERIES - VENTING APPLICATION GUIDE.
2. TERMINATE INTAKE DUCT WITH GOOSE NECK. INTAKE DUCT MUST BE SEALED AIR TIGHT.
3. EXTEND THROUGH ROOF WITH PROPER FLASHING OR BOOT AND COMPLETELY SEAL. INSTALL WITH RAIN CAP. VENT REQUIRED TO BE 3 FEET ABOVE TOP OF INTAKE DUCTS.
4. COMBUSTION AIR FOR WH-1. ONE DUCT SHALL COMMENCE 12 INCHES FROM THE TOP AND THE OTHER DUCT SHALL COMMENCE 12 INCHES FROM THE BOTTOM OF THE FLOOR. TERMINATE DUCTS AT ROOF WITH GOOSENECKS.
5. ATC PANEL.
6. INSTAL CN-1 (CONDENSATE NEUTRALIZER KIT ON B-1 PRIOR TO TAKING TO FLOOR DRAIN.

1 MECHANICAL PLAN LEVEL 3
SCALE: 1/4" = 1'-0"

FFKR ARCHITECTS
730 Pacific Avenue - Salt Lake City, Utah 84104
O 801.521.0186 - FFKR.COM

VBFA www.vbfa.com
Mark Vaughn Bybee, Trevor Bybee
181 East 6965 South
Murray, UT 84107
801.530.3148 T
801.530.3150 F
VBFA Project Number: 20486

Utah Fertility Center Outpatient Surgery Facility
1365 W Pleasant Grove Blvd, Pleasant Grove, UT 84062
UTAH FERTILITY CENTER
CONSTRUCTION DOCUMENTS - 12.MAR.2021

REGISTERED PROFESSIONAL ENGINEER
No. 11599476-2202
DALLEN BLAIR ROMRELL
03.12.2021
STATE OF UTAH

△ DATE REVISION

PROJECT NUMBER 20087

MECHANICAL PLAN LEVEL 3

MH103

3/12/2021 1:37:38 PM

System No. F-A-1014
F Rating — 2 Hr
T Rating — 0 Hr

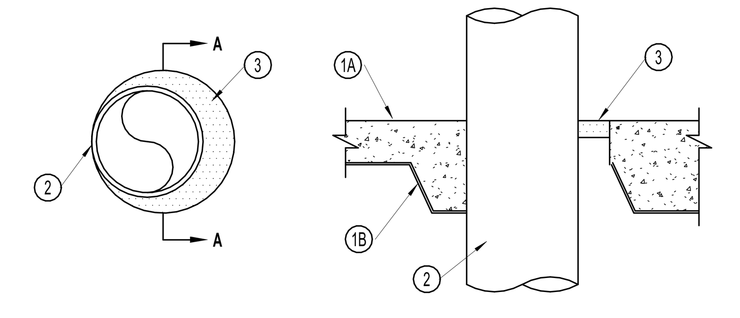

1. Floor Assembly — The fire rated unprotected concrete and steel floor assembly shall be constructed of the materials and in the manner specified in the individual D900 Series designs in the UL Fire Resistance Directory and as summarized below:
   A. Concrete — Min 2-1/2 in. thick reinforced lightweight or normal weight (100-150 pcf) concrete.
   B. Steel Floor and Form Units* — Composite or non-composite max 3 in. deep galv steel fluted units as specified in the individual Floor-Ceiling Design. Max diam of opening is 14-5/8 in.
2. Through Penetrants — One metallic tubing, pipe or conduit to be installed within the firestop system. Pipe, tubing or conduit to be rigidly supported on both sides of floor-ceiling assembly. The annular space between pipe, tubing or conduit and periphery of opening shall be min of 0 in. (point contact) to max 1-7/8 in. The following types and sizes of metallic pipes, tubing or conduit may be used:
   A. Steel Pipe — Nom 12 in. diam (or smaller) Schedule 10 (or heavier) steel pipe.
   B. Conduit — Nom 4 in. diam (or smaller) steel electrical metallic tubing or nom 6 in. diam (or smaller) steel conduit.
   C. Copper Tube — Nom 6 in. diam (or smaller) Type L (or heavier) copper tube.
   D. Copper Pipe — Nom 6 in. diam (or smaller) Regular (or heavier) copper pipe.
3. Fill, Void or Cavity Materials*-Sealant — Min 1 in. thickness of sealant applied within annular space, flush with top surface of floor. At the point contact location, between pipe and concrete, a min 1/2 in. diam bead of fill material shall be applied at the concrete/pipe interface on the top surface of floor.

HILTI CONSTRUCTION CHEMICALS, DIV OF HILTI INC — FS-ONE Sealant

*Bearing the UL Classification Mark

FA 1014

FIRESTOP SYSTEMS

Reproduced by HILTI, Inc. Courtesy of Underwriters Laboratories, Inc. September 01, 2005

CLASSIFIED C US

15 HILTI-F-A-1014

SCALE: N.T.S

System No. W-L-1054
F Ratings - 1 and 2 Hr (See Items 1 and 3)
T Rating - 0 Hr
L Rating At Ambient - Less Than 1 CFM/Sq Ft
L Rating At 400 F - 4 CFM/Sq Ft

WL 1054

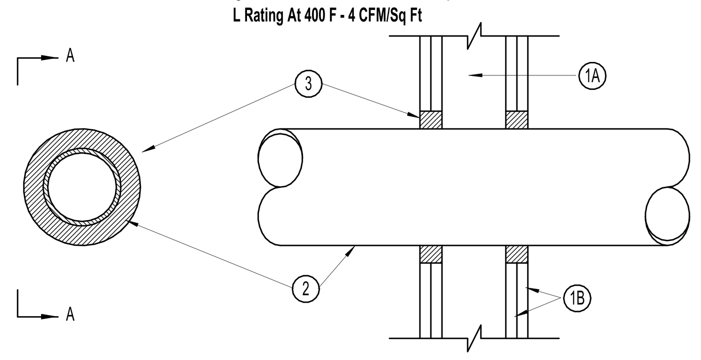

1. Wall Assembly -- The 1 or 2 hr fire-rated gypsum wallboard/stud wall assembly shall be constructed of the materials and in the manner specified in the individual U300 or U400 Series Wall and Partition Designs in the UL Fire Resistance Directory and shall include the following construction features:
   A. Studs -- Wall framing may consist of either wood studs or steel channel studs. Wood studs to consist of nom 2 by 4 in. lumber spaced 16 in. OC. Steel studs to be min 2-1/2 in. wide and spaced max 24 in. OC. When steel studs are used and the diam of opening exceeds the width of stud cavity, the opening shall be framed on all sides using lengths of steel stud installed between the vertical studs and screw-attached to the steel studs at each end. The framed opening in the wall shall be 4 to 6 in. wider and 4 to 6 in. higher than the diam of the penetrating item such that, when the penetrating item is installed in the opening, a 2 to 3 in. clearance is present between the penetrating item and the framing on all four sides.
   B. Gypsum Board* -- 5/8 in. thick, 4 ft wide with square or tapered edges. The gypsum board type, thickness, number of layers, fastener type and sheet orientation shall be as specified in the individual U300 or U400 Series Design in the UL Fire Resistance Directory. Max diam of opening is 32-1/4 in. for steel stud walls. Max diam of opening is 14-1/2 in. for wood stud walls.
   The F Rating of the firestop system is equal to the fire rating of the wall assembly.

2. Through-Penetrants -- One metallic pipe, conduit or tubing to be installed either concentrically or eccentrically within the firestop system. The annular space shall be min 0 in. to max 2-1/4 in. Pipe may be installed with continuous point contact. Pipe, conduit or tubing may be installed at an angle not greater than 45 degrees from perpendicular. Pipe, conduit or tubing to be rigidly supported on both sides of wall assembly. The following types and sizes of metallic pipes, conduits or tubing may be used:
   A. Steel Pipe -- Nom 30 in diam (or smaller) Schedule 10 (or heavier) steel pipe.
   B. Iron Pipe -- Nom 30 in. diam (or smaller) cast or ductile iron pipe.
   C. Conduit -- Nom 4 in diam (or smaller) steel electrical metallic tubing or 6 in. diam steel conduit.
   D. Copper Tubing -- Nom 6 in. diam (or smaller) Type L (or heavier) copper tubing.
   E. Copper Pipe -- Nom 6 in. diam (or smaller) regular (or heavier) copper pipe.
3. Fill, Void or Cavity Material* -- Sealant -- Min 5/8 in. thickness of fill material applied within the annulus, flush with both surfaces of wall. At the point or continuous contact locations between pipe and wall, a min 1/2 in. diam bead of fill material shall be applied at the pipe wall interface on both surfaces of wall .

HILTI CONSTRUCTION CHEMICALS, DIV OF
HILTI INC -- FS-One Sealant

*Bearing the UL Classification Mark

Hilti Firestop Systems

Reproduced by HILTI, Inc. Courtesy of Underwriters Laboratories, Inc. December 4, 2002

CLASSIFIED C US

16 HILTI-W-L-1054

SCALE: N.T.S

System No. C-AJ-7084
F Rating - 2 Hr
T Rating - 0 Hr

CAJ 7084

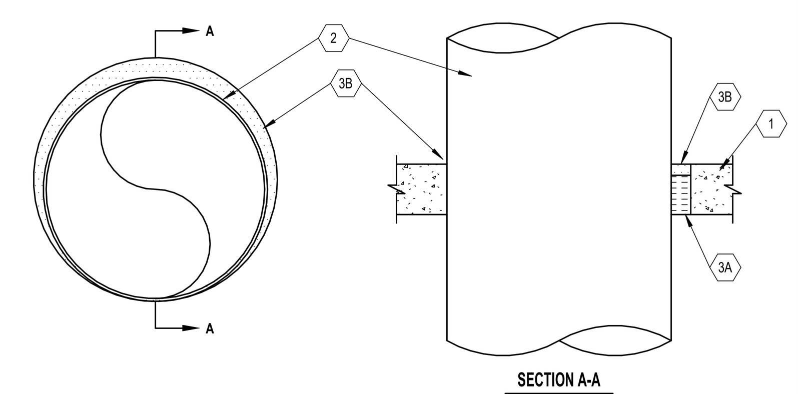

1. Floor or Wall Assembly - Min 4-1/2 in. thick reinforced lightweight or normal weight (100-150 pcf) concrete. Wall may also be constructed of any UL Classified Concrete Blocks*. Max diam of opening is 21-3/4 in.
   See Concrete Blocks (CAZT) category in the Fire Resistance Directory for names of manufacturers.
2. Through Penetrant - Galv steel duct to be installed concentrically or eccentrically within the firestop system. The annular space between the duct and periphery of opening shall be 0 in. (point contact) and max 1-1/2 in. Duct to be rigidly supported on both sides of wall assembly.
   A. Spiral Wound HVAC Duct - Nom 20 in. diam (or smaller) No. 24 MSG (or heavier) galv steel spiral wound duct.
   B. Sheet Metal Duct - Nom 12 in. diam (or smaller) No. 28 MSG (or heavier) galv sheet steel duct.
3. Firestop System - The firestop system shall consist of the following:
   A. Packing Material - Min 3-1/2 in. thickness of min 4.0 pcf mineral wool batt insulation firmly packed into opening as a permanent form. Packing material to be recessed from top surface of floor or both surfaces of wall to accommodate the required thickness of fill material.
   B. Fill, Void or Cavity Material*-Sealant - Min 1 in. thickness of fill material applied within annulus, flush with top surface of floor or both surfaces of wall assembly. At the point contact location between duct and periphery of opening, a min 1/2 in. diam bead of sealant shall be applied at the concrete/duct interface.
   HILTI CONSTRUCTION CHEMICALS, DIV OF
   HILTI INC - FS-ONE Sealant, CP601S Elastomeric Firestop Sealant, CP606 Flexible Firestop Sealant or CP 604 Self-Leveling Firestop Sealant.
   (Note: CP 604 Self-Leveling Firestop Sealant to be used on floor assemblies only.)

*Bearing the UL Classification Mark

FIRESTOP SYSTEMS

Reproduced by HILTI, Inc. Courtesy of Underwriters Laboratories, Inc. Jully 08, 2003

CLASSIFIED C US

12 HILTI-C-AJ-7084

SCALE: N.T.S

System No. C-AJ-7111
F Rating -- 2 Hr
T Rating -- 0 Hr

CAJ 7111

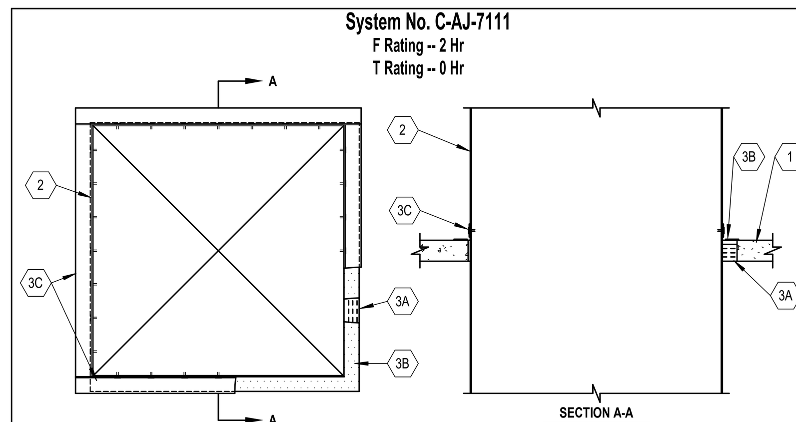

1. Floor or Wall Assembly -- Min 2-1/2 in. (64 mm) thick reinforced lightweight or normal weight (100-150 pcf or 1600-2400 kg/m3) concrete floor or min 3 in. (76 mm) thick reinforced lightweight or normal weight (100-150 pcf or 1600-2400 kg/m3) concrete wall. Wall may also be constructed of any UL Classified Concrete Blocks*. Max area of opening is 7.1 sq ft (0.66 m2) with max dimension of 32 in. (813 mm).
   See Concrete Blocks (CAZT) category in the Fire Resistance Directory for names of manufacturers.
2. Steel Duct -- Max 30 by 30 in. (762 by 762 mm) No. 24 gauge (or heavier) steel duct. One duct to be installed within the firestop system with a min 1/4 in. (6 mm) to max 1-3/4 in. (44 mm) annular space. Steel duct to be rigidly supported on both sides of floor or wall assembly.
3. Firestop System -- The firestop system shall consist of the following:
   A. Packing Material -- Min 2 in. (51 mm) thickness of min 4 pcf (64 kg/m3) mineral wool batt insulation firmly packed into opening as a permanent form. Packing material to be recessed from top surface of floor or from both surfaces of wall as required to accommodate the required thickness of fill material.
   B. Fill, Void or Cavity Material* -- Sealant -- Min 1/2 in. (13 mm) thickness of fill material applied within the annulus, flush with top surface of floor or with both surfaces of wall.
   HILTI CONSTRUCTION CHEMICALS, DIV OF HILTI INC -- FS-One Sealant
   C. Steel Angle -- Min 2 in. (51 mm) wide by 2 in. (51 mm) high No. 16 gauge (or heavier) steel angle cut to fit the contour of the duct with a min 1/4 in. (6 mm) lap on the top surface of floor or on both surfaces of wall on all sides of the opening. Legs of angles secured to duct with No. 8 by 3/4 in. (19 mm) long steel sheet metal screws spaced max 4 in. (102 mm) OC.

*Bearing the UL Classification Mark

FIRESTOP SYSTEMS

Reproduced by HILTI, Inc. Courtesy of Underwriters Laboratories, Inc. September 09, 2005

CLASSIFIED C US

13 HILTI-C-AJ-7111

SCALE: N.T.S

UL/cUL SYSTEM NO. C-BJ-1034
METALLIC PIPE THROUGH CONCRETE FLOOR/WALL OR BLOCK WALL

WL C-BJ-1034

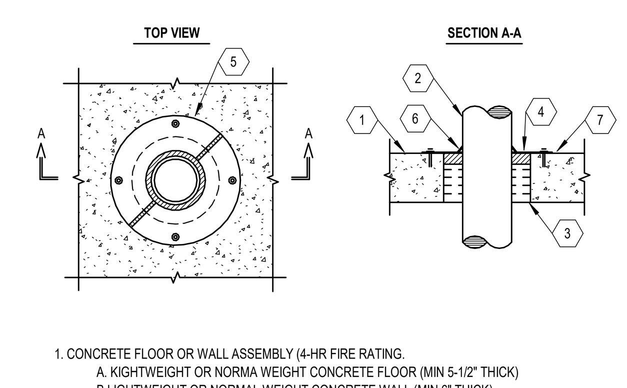

1. CONCRETE FLOOR OR WALL ASSEMBLY (4-HR FIRE RATING.
   A. KIGHTWEIGHT OR NORMA WEIGHT CONCRETE FLOOR (MIN 5-1/2" THICK)
   B.LIGHTWEIGHT OR NORMAL WEIGHT CONCRETE WALL (MIN 6" THICK)
   C.ANY UL/ULC CLASSIFIED CONCRETE BLOCK WALL
2. PENETRATING ITEM TO BE ANY ONE OF THE FOLLOWING:
   A. MAXIMUM 4" NORMAL DIAMETER STEEL PIPE (SCHEDULE 40 OR HEAVIER)
   B. MAXIMUM 4" NORMAL DIAMETER STEEL CONDUIT.
   C. MAXIMUM 4" NORMAL DIAMETER EMT.
3. MINIMUM 4" THICKNESS MINERAL WOOL (MIN 4 PCF DENSITY) TIGHTLY PACKAGED.
4. MINIMUM 1" DEPTH HILTI FS-ONE INTUMESCENT FIRESTOP SEALANT.
5. MINIMU 18 GA. SHEET METAL COVER PLATE SECURELY ATTACHED WITH HILTI POWDER ACTIVATED FASTNERS (X-ZF 27 PINS)
6. MINIMUM 1/2" BEAD HILTI FS-ONE INTUMESCENT FIRESTOP SEALANT AT INTERFACE BETWEEN COVERPLATE AND PIPE.
7. SEE NOTE NO. 3 BELOW.

NOTES: 1. MAXIMUM DIAMTER OF OPENING=10-1/2".
2. ANNULAR SPACE = MINIMUM 3/4". MAXIMUM 3".
3. PROVIDE A GENEROUS BEAD OF HILTI FS-ONE INTUMESCENT FIRESTOP SEALANT ALONG EDGE OF COVER PLATE.
4. INSIDE DIAMETER OD STEEL PLATE SHOULD BE SAME AS PIPE OUTSIDE DIAMTER. OUTSIDE DIAMETER OF STEEL PLATE IS TO BE SIZED MINIMUM 1-1/2" LARGER THAN PERIPHERY OF OPENING.

FIRESTOP SYSTEMS

Reproduced by HILTI, Inc. Courtesy of Underwriters Laboratories, Inc. December 07, 2002

CLASSIFIED C US

14 HILTI-C-BJ-1034

SCALE: N.T.S

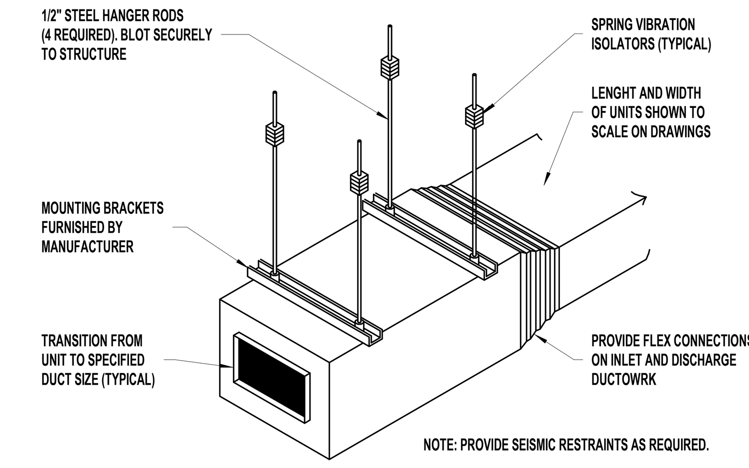

7 INLINE EXHAUST FAN DETAIL

SCALE: N.T.S

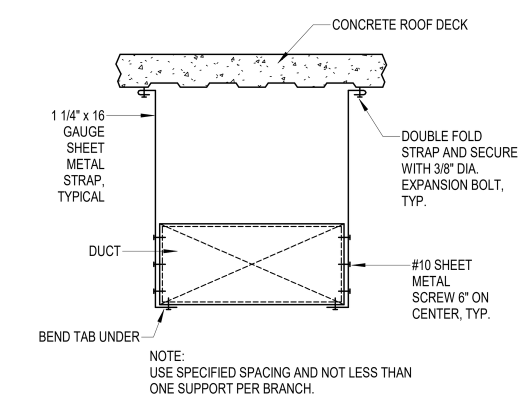

8 RECTANGULAR DUCT SUPPORT

SCALE: N.T.S

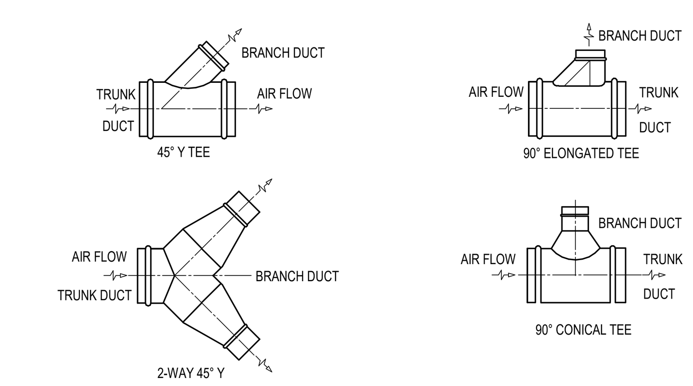

9 ROUND DUCT BRANCH TAKE-OFF DETAILS

SCALE: N.T.S

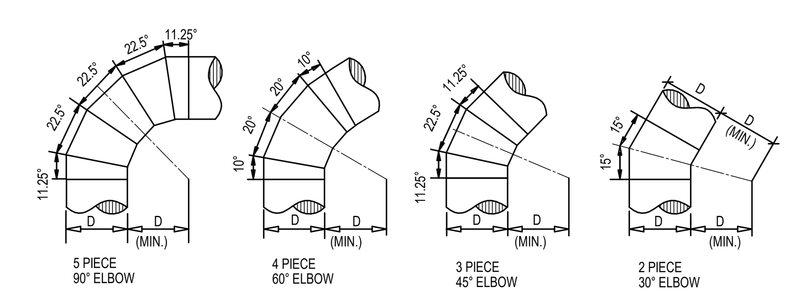

10 ROUND DUCT ELBOW DETAILS

SCALE: N.T.S

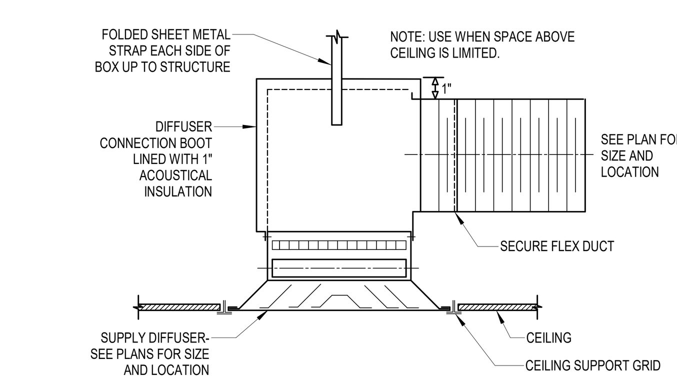

11 SUPPLY DIFFUSER W/ FLEX DUCT DETAIL

SCALE: N.T.S

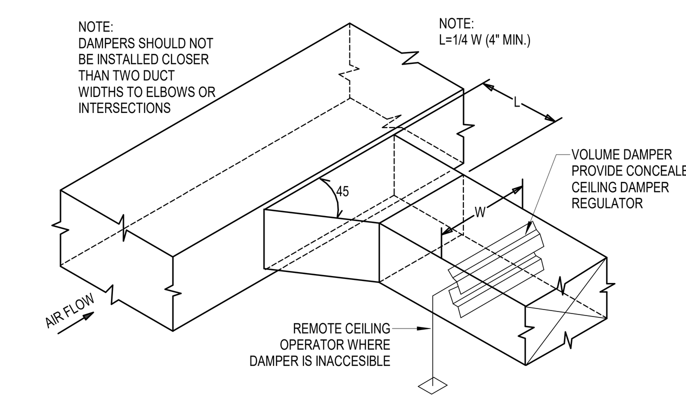

1 BRANCH DUCT TAKE-OFF & DAMPER DETAIL

SCALE: N.T.S

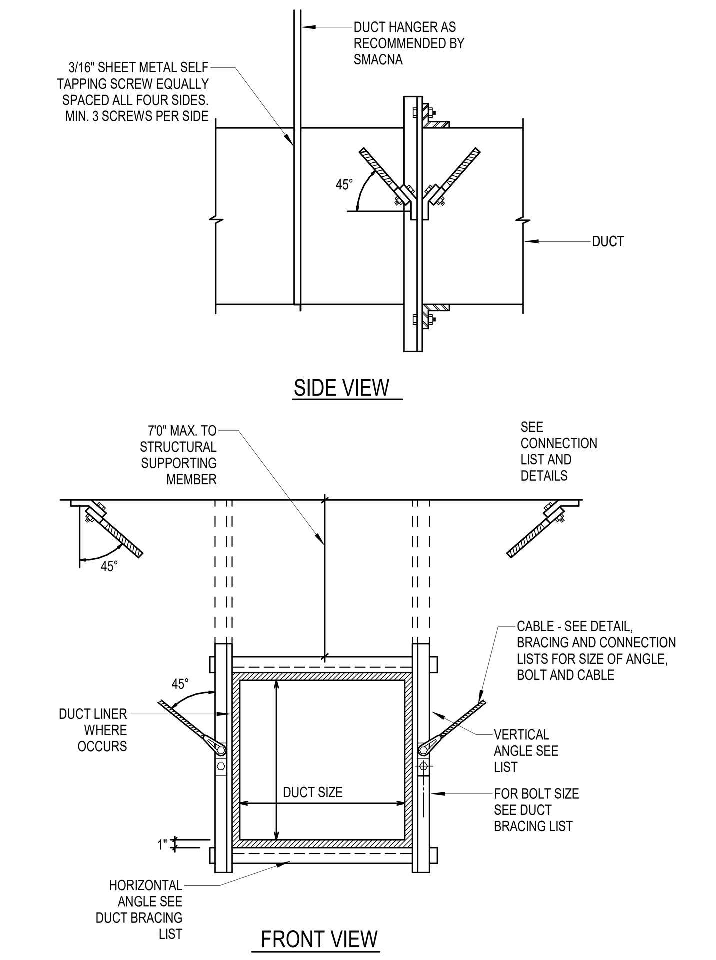

2 CABLE BRACING FOR RECTANGULAR DUCTS

SCALE: N.T.S

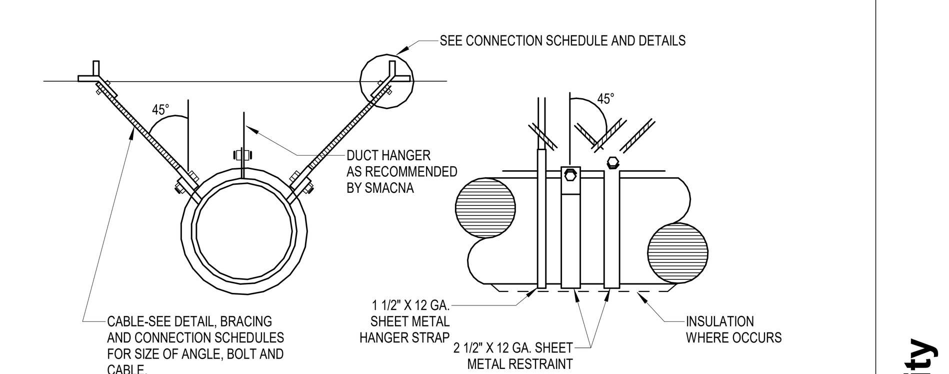

3 CABLE BRACING FOR ROUND AND OVAL DUCTS

SCALE: N.T.S

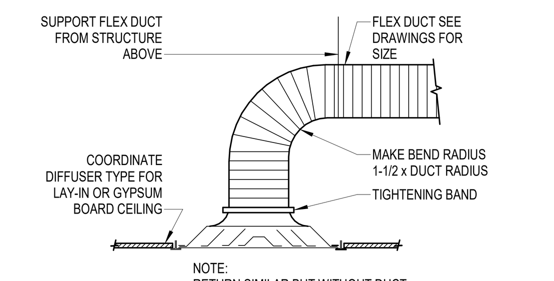

4 DIFFUSER CONNECTION DETAIL

SCALE: N.T.S

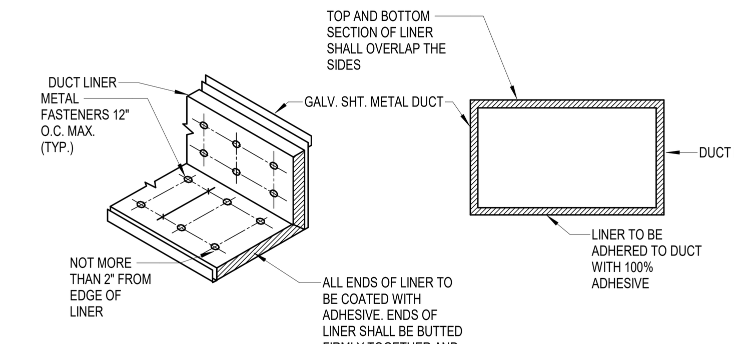

5 DUCT LINER DETAIL

SCALE: N.T.S

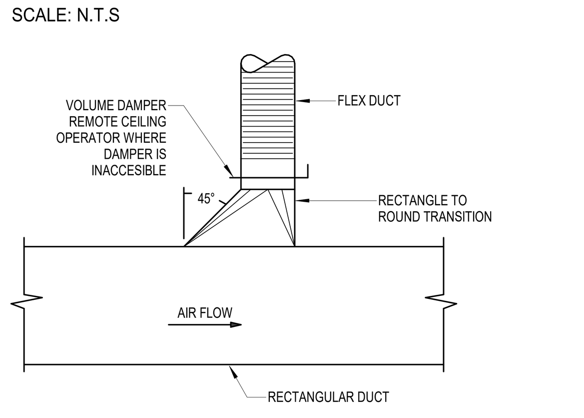

6 HIGH EFFICIENCY TAKE-OFF DETAIL

SCALE: N.T.S

FFKR ARCHITECTS
730 Pacific Avenue · Salt Lake City, Utah 84104
O 801.521.6186 · FFKR.COM

VBFA WWW.VBFA.COM
Murray · Logan · St. George · Tempe
181 East 5600 South 801.530.3148 T
Murray, UT 84107 801.530.3150 F
VBFA Project Number: 20405

Utah Fertility Center Outpatient Surgery Facility
1365 W Pleasant Grove Blvd, Pleasant Grove, UT 84062
UTAH FERTILITY CENTER
CONSTRUCTION DOCUMENTS - 12.MAR.2021

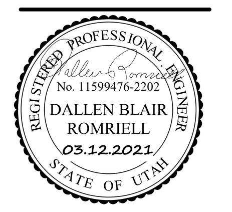

DATE	REVISION

PROJECT NUMBER 20087

MECHANICAL DETAILS

MH501

3/12/2021 1:37:42 PM

System No. W-L-7096
F Rating - 1 Hr
T Rating - 0 Hr

WL 7096

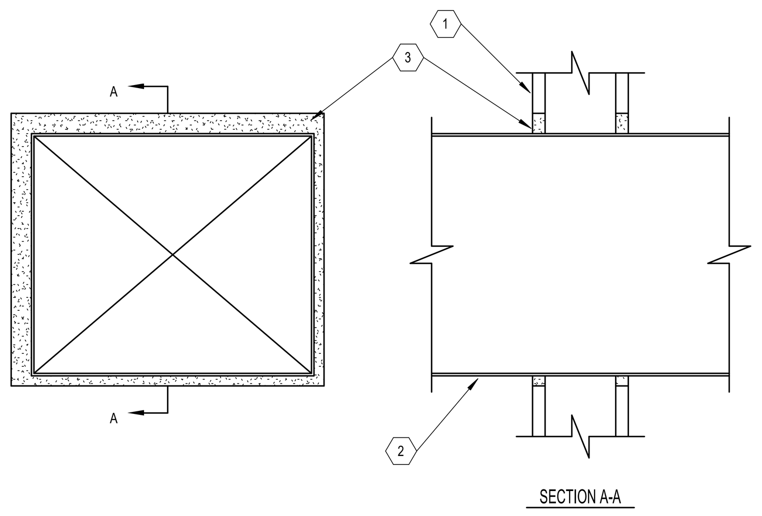

1. Wall Assembly -- The 1 hr fire-rated gypsum board/stud wall assembly shall be constructed of the materials and in the manner described in the individual U400 Series Wall or Partition Design in the UL Fire Resistance Directory and shall include the following construction features:
   A. Studs --Wall framing to consist of min 3-1/2 in. wide steel channel studs, fabricated from 25 MSG galv steel, spaced max 24 in. OC.
   B. Gypsum Board* --One layer of nom 5/8 in. thick gypsum board, as specified in the individual Wall and Partition Design. Max area of opening is 202 sq in. with max dimension of 15-1/4 in.
2. Steel Duct --Nom 12 in by 14 in. (or smaller) No. 24 gauge (or heavier) galv steel duct to be installed either concentrically or eccentrically within the firestop system. The annular space shall be min ¼ in. to max 1 in. Duct to be rigidly supported on both sides of the wall assembly.
3. Fill, Void or Cavity Material - Sealant* -- Min 5/8 in. thickness of fill material applied within annular space, flush with both surfaces of wall.

HILTI CONSTRUCTION CHEMICALS, DIV OF
HILTI INC -- FS-ONE Sealant
*Bearing the UL Classification Mark

FIRESTOP SYSTEMS
Reproduced by HILTI, Inc. Courtesy of Underwriters Laboratories, Inc. December 07, 2002

8 HILTI-W-L-7096
SCALE: N.T.S

System No. W-L-7068
F Ratings - 1 and 2 Hr (See Items 1 and 4)
T Rating - 0 Hr

WL 7068

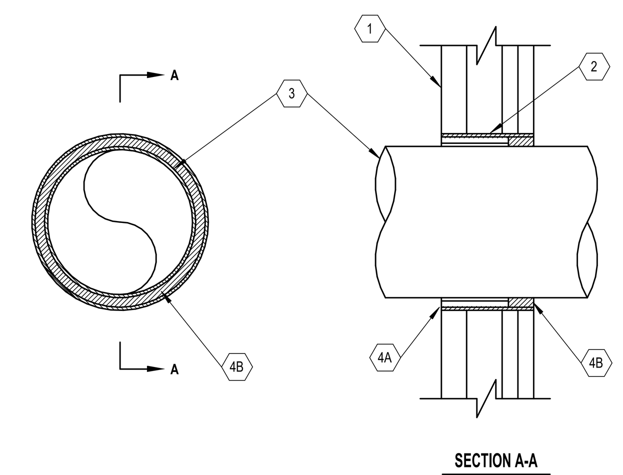

FIRESTOP SYSTEMS
Reproduced by HILTI, Inc. Courtesy of Underwriters Laboratories, Inc. September 01, 2005
Page: 1 of 2

6 HILTI-W-L-7068
SCALE: N.T.S

System No. W-L-7068
F Ratings - 1 and 2 Hr (See Items 1 and 4)
T Rating - 0 Hr

WL 7068

1. Wall Assembly — The 1 or 2 hr fire-rated gypsum board/stud wall assembly shall be constructed of of the materials and in the manner described in the individual U400 or V400 Series Wall and Partition Design in the UL Fire Resistance Directory and shall include the following construction features:

   A. Studs — "C-T" shaped studs -1-5/8 in. wide by 2-1/2 in. deep, fabricated from 25 MSG galv steel, spaced max 24 in. OC.
   B. Gypsum Board* — One layer of nom 1in. thick, 24 in. wide gypsum liner and one or two layers of nom 5/8 in. thick, 4 ft. wide gypsum board with square or tapered edges. The gypsum board type, number of layers, fastener type and sheet orientation shall be as specified in the individual Wall and Partition Design. Max diam of opening is 7 in.

1A. Wall Assembly — As an alternate to the above wall assembly, the 1 or 2 Hr fire rated gypsum board/stud wall assembly shall be constructed of the materials and in the manner specified in the individual U300, U400 or V400 Series Wall and Partition Designs in the UL Fire Resistance Directory and shall include the following construction features:

   A. Studs — Wall framing may consist of either wood studs or steel channel studs. Steel studs to be min 2-1/2 in. wide and spaced max 24 in. OC. Wood studs to consist of nom 2 by 4 in. lumber spaced 16 in. OC.
   B. Gypsum Board* — Thickness, type, number of layers and fasteners as required in the individual Wall and Partition Design. Max diam of opening is 7 in.

The hourly F Rating of the firestop system is equal to the hourly fire rating of the wall assembly in which it is installed.

2. Metallic Sleeve — Max 7 in. diam cylindrical sleeve fabricated from min 0.016 in. thick (28 gauge) galv sheet steel and having a min 1 in. lap along the longitudinal seam. Length of steel sleeve to be equal to thickness of wall. Sleeve installed by coiling the sheet steel to a diam smaller than the through opening, inserting the coil through the opening and releasing the coil to let it uncoil against the circular cutouts in the gypsum board layers. Sleeve may also be formed of No. 8 steel wire mesh having a min 1 in. lap along the longitudinal seam.

3. Steel Duct — Nom 6 in. diam (or smaller) No. 28 gauge (or heavier) galv steel duct to be installed either concentrically or eccentrically within the firestop system. The annular space shall be min 1/4 in. to max 3/4 in. Duct to be rigidly supported on both sides of the wall assembly.

4. Firestop System — The firestop system shall consist of the following:

   A. Packing Material — Min 2-1/8 or 2-3/4 in. thickness of min 4 pcf mineral wool batt insulation firmly packed into sleeve on one side of the wall as a permanent form for 1 and 2 hr walls, respectively. Packing material to be recessed from the room side of wall as required to accommodate the required thickness of fill material. In alternate wall assembly, packing material to be flush with either side of the wall and recessed from the other side of the wall to accommodate the required thickness of fill material.
   B. Fill, Void or Cavity Material — Sealant* — Min 1 in. thickness of fill material applied within opening, flush with one surface of wall.
   HILTI CONSTRUCTION CHEMICALS, DIV OF
   HILTI INC — FS-ONE Sealant

*Bearing the UL Classification Mark

FIRESTOP SYSTEMS
Reproduced by HILTI, Inc. Courtesy of Underwriters Laboratories, Inc. September 01, 2005
Page: 2 of 2

7 HILTI-W-L-7068 (2)
SCALE: N.T.S

System No. W-L-7042
F Ratings - 1 and 2 Hr (See Items 1 and 3)
T Rating - 0 Hr

WL 7042

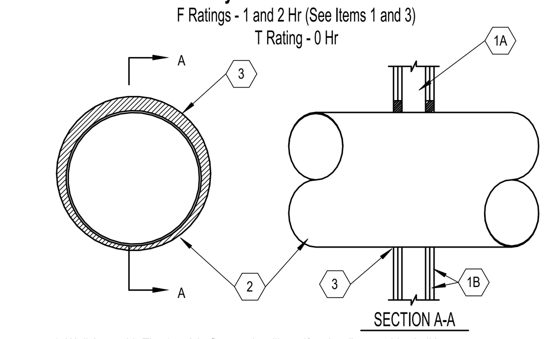

1. Wall Assembly The 1 or 2 hr fire rated wallboard/stud wall assembly shall be constructed of the materials and in the manner specified in the individual U300 or U400 Series Wall and Partition Designs in the UL Fire Resistance Directory and shall include the following construction features.
   A. Studs Wall framing may consist of either wood studs or steel channel studs. Wood studs to consist of nom 2 by 4 in. lumber spaced 16 in. OC. Steel studs to be min 2-1/2 in. wide and spaced 24 in. OC.
   B. Gypsum Board* For 1 hr assembly, one layer of min 5/8 in. thick wallboard as required in the individual Wall and Partition Design. For 2 hr assembly, two layers of min 5/8 in. thick wallboard as required in the individual Wall and Partition Design. Max diam of opening is 14-1/2 in. for wood stud walls and 21-3/4 for steel stud walls.
   The hourly F and T Ratings of the firestop system is equal to the hourly fire rating of the wall assembly in which it is installed.
2. Through Penetrant Galv steel duct to be installed concentrically or eccentrically within the firestop system. The annular space between the duct and periphery of opening shall be 0 in. (point contact) and max 1-1/2 in. Duct to be rigidly supported on both sides of wall assembly.
   A. Spiral Wound HVAC DuctNom 20 in. diam (or smaller) No. 24 MSG (or heavier) galv steel spriral wound duct.
   B. Sheet Metal Duct Nom 12 in. diam (or smaller) No. 28 MSG (or heavier) galv sheet steel duct.
3. Fill, Void or Cavity Material*--Sealant Min 5/8 in. and 1-1/4 in. thickness of fill material applied within annulus, flush with both surfaces of wall assembly for 1 or 2 hr rated walls, respectively. At the point contact location between duct and wallboard, a min 1/2 in. diam bead of sealant shall be applied at the wallboard/ duct interface on both surfaces of wall assembly.
   HILTI CONSTRUCTION CHEMICALS, DIV OF
   HILTI INC - CP601S Elastomeric Firestop Sealant, FS-ONE Sealant or CP606 Flexible Firestop Sealant

*Bearing the UL Classification Mark

FIRESTOP SYSTEMS
Reproduced by HILTI, Inc. Courtesy of Underwriters Laboratories, Inc. November 30, 2000

3 HILTI-W-L-7042
SCALE: N.T.S

System No. W-L-7059
F Ratings - 1 and 2 Hr
T Rating - 1/2 and 3/4 Hr

WL 7059

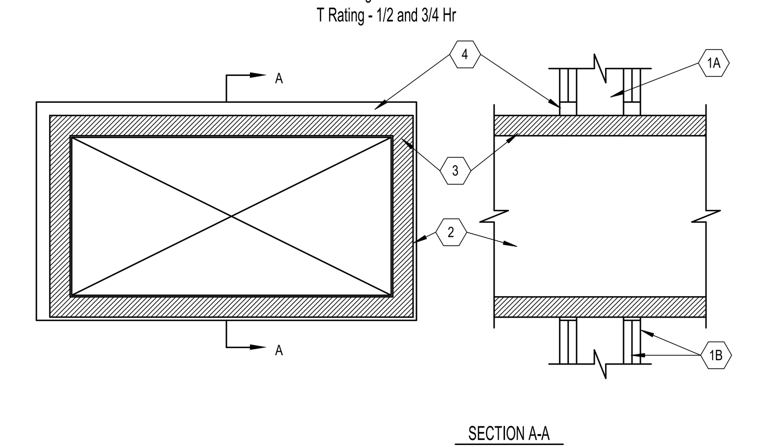

1. Wall Assembly The 1 or 2 fire-rated gypsum wallboard/stud wall assembly shall be constructed of the materials and in the manner specified in the individual U400 Series or Partition Designs in the UL Fire Resistance Directory and shall include the following construction features:
   A. Studs Wall framing shall consist of channel studs. Steel studs to be min 2-1/2 in . wide and spaced max 24 in. OC. The opening in the wll to accommodate the steel duct (item 2) shall be framed on all sides using lengths of studs installed between the vertical studs and attached to the studs at each end. The framed opening in the wall shall be a nom 6 in. wide and 12 in. or higher than the width and height of the steel duct.
   B. Wallboard, Gypsum* 5/8 in. thick, 4 ft wide with square or tapered edges. The gypsum wallboard type, thickness, number of layers, fastener type and sheet orientation shall be as specified in teh individual U300 or U400 Series Design in the UL Fire Resistance Directory. Max area of opening is 395 sq. in. with max dimensions of 26-3/4 in. for steel studs.

FIRESTOP SYSTEMS
Reproduced by HILTI, Inc. Courtesy of Underwriters Laboratories, Inc. March 21, 2001
Page: 1 of 2

4 HILTI-W-L-7059
SCALE: N.T.S

System No. W-L-7059
F Ratings - 1 and 2 Hr
T Rating - 1/2 and 3/4 Hr

WL 7059

2. Steel Duct Nom 24 in. by 12 in. (or smaller) 24 guage (or heavier) steel duct. to be installed eccentrically within the opening. the annular space shall be min 1 in. to max 1-3/4. Duct to be rigidly supported on both sides of the wall assembly.
3. Batt and Blanket* - Max 1-1/2 thick glass fiber batt or blankett (min. 3.4 pcf) jacketed on the outside with a foil-scrim-kraft facing. compressed 50% such that the annular space within the firestop system shall be min 1/4 in. to max 1 in. See Batts and Blankets (BKNV) category in the Building Materials Directory for names manufacturers. Any batt or blanket meeting the above specifications and bearing the UL Classification Marking with a Flame Spread Index of 25 or less and a smoke Developed Index 50 or less may be used.
4. Fill, Void or Cavity Material* - Sealant Min 5/8 in. or 1-1/4 in. thickness of fill material applied within the annulus, flush with both surfaces of wall for 1 or 2 hr walls, respectively. If voids develops after the fill material cures, the voids shall be sealed with additional fill material.
   HILTI CONSTRUCTION CHEMICALS, DIV OF
   HILTI INC - FS-One Sealant

*Bearing the UL Classification Mark

FIRESTOP SYSTEMS
Reproduced by HILTI, Inc. Courtesy of Underwriters Laboratories, Inc. March 21, 2001
Page:2 of 2

5 HILTI-W-L-7059 (2)
SCALE: N.T.S

System No. W-L-5028
F Ratings - 1 and 2 Hr (See Item 1)
T Ratings - 3/4 Hr
L Rating at Ambient - Less Than 1 CFM/sq ft
L Rating at 400 F - Less Than 1 CFM/sq ft

WL 5028

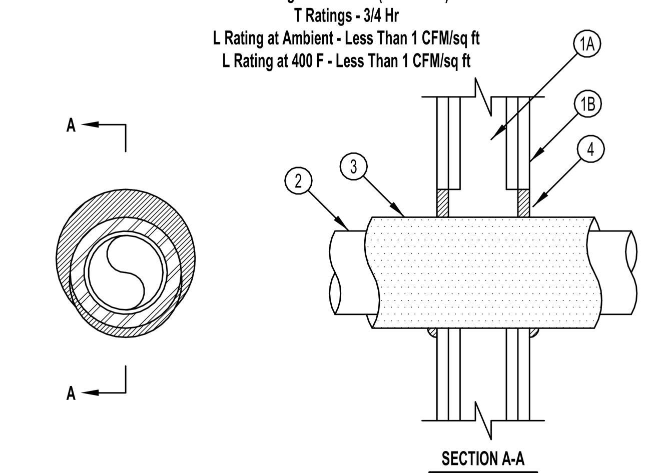

1. Wall Assembly — The 1 or 2 hr fire-rated gypsum wallboard/stud wall assembly shall be constructed of the materials and in the manner specified in the individual U300 or U400 Series Wall and Partition Designs in the UL Fire Resistance Directory and shall include the following construction features:

   A. Studs — Wall framing may consist of either wood studs or steel channel studs. Wood studs to consist of nom 2 by 4 in. lumber spaced 16 in. OC. Steel studs to be min 2-1/2 in. wide and spaced max 24 in. OC.
   B. Gypsum Board* — 5/8 in. thick, 4 ft wide with square or tapered edges. The gypsum wallboard type, thickness, number of layers, fastener type and sheet orientation shall be as specified in the individual Wall and Partition Design. Max diam of opening is 7-1/2 in.
   The hourly F Rating of the firestop system is equal to the hourly fire rating of the wall assembly in which it is installed.

2. Through Penetrants — One metallic pipe or tubing to be centered within the firestop system. Pipe or tubing to be rigidly supported on both sides of wall assembly. The following types and sizes of metallic pipes or tubing may be used:

   A. Steel Pipe — Nom 4 in. diam (or smaller) Schedule 40 (or heavier) steel pipe.
   B. Copper Tubing — Nom 2 in. diam (or smaller) Type L (or heavier) copper tubing.
   C. Copper Pipe — Nom 2 in. diam (or smaller) Regular (or heavier) copper pipe.

3. Tube Insulation — Plastics+ — Nom 3/4 in. thick acrylonitrile butadiene/polyvinyl chloride (AB/PVC) flexible foam furnished in the form of tubing. An annular space of min 0 in. (point contact) to max 1-1/2 in. is required within the firestop system.

See Plastics+ (QMFZ2) category in the Recognized Component Directory for names of manufacturers. Any Recognized Component tube insulation material meeting the above specifications and having a UL 94 Flammability Classification of 94-5VA may be used.
The hour T Rating of the firestop system is dependent on the hourly fire rating of the wall assembly in which it is installed, the size and type of through penetrant and the pipe covering thickness, as shown in the table below:

Wall Assembly Hr Rating	Type +	Through Penetrant Max Diam In.
1	A	4
1	A, B, or C	2
2	A	4
2	A, B, or C	2

+Indicates penetrant type as itemized in Item 2.

4. Fill, Void or Cavity Material* — Sealant — Min 5/8 in. thickness of fill material applied within the annulus, flush with both surfaces of wall. At the point contact location between pipe covering and gypsum wallboard, a min 1/2 in. diam bead of fill material shall be applied at the pipe covering/gypsum wallboard interface on both surfaces of wall.

HILTI CONSTRUCTION CHEMICALS, DIV OF
HILTI INC — FS-ONE Sealant

*Bearing the UL Classification Mark

Hilti Firestop Systems
Reproduced by HILTI, Inc. Courtesy of Underwriters Laboratories, Inc. February 08, 2006

1 HILTI-W-L-5028
SCALE: N.T.S

System No. W-L-7040
F Ratings — 1 and 2 Hrs (See Items 1 and 3)
T Rating — 0 Hr

WL 7040

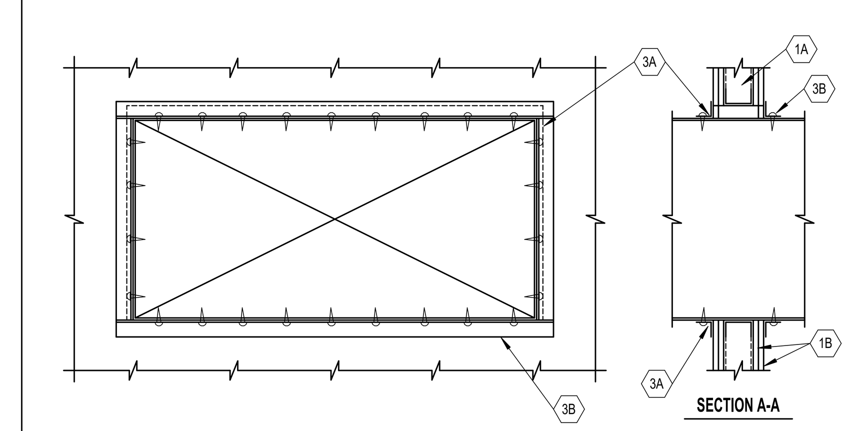

1. Wall Assembly — The fire-rated gypsum wallboard/stud wall assembly shall be constructed of the materials and in the manner specified in the individual U300 or U400 Series Wall and Partition Designs in the Fire Resistance Directory and shall include the following construction features:
   A. Studs — Wall framing may consist of either wood studs or steel channel studs. Wood studs to consist of nom 2 by 4 in. lumber spaced 16 in. OC. Steel studs to be min 2-1/2 in. wide and spaced max 24 in. Additional framing members shall be used to completely frame around opening.
   B. Gypsum Board* — Nom 5/8 in. thick with square or tapered edges. The gypsum wallboard type, number of layers and sheet orientation shall be as specified in the individual Wall and Partition Design Number. Max area of opening is 1300 in. with the dimension of 50 in. The hourly F rating of the firestop system is equal to the hourly fire rating of the wall assembly in which it is installed.
2. Steel Duct — Nom 24 in. by 48 in. (or smaller) No. 24 gauge (or heavier) galv steel duct to be installed within the firestop system. The annular space shall be min 0 (point contact) in. to a max 2 in. Duct to be rigidly supported on both sides of the wall assembly.
3. Firestop System — The firestop system shall consist of the following:
   A. Fill, Void or Cavity Material*—Sealant — Min 5/8 in. thickness of fill material applied within annulus flush with both surfaces of wall. At point contact location, a min 1/2 in. diam bead of fill material shall be applied to the wall/duct interface on both surfaces of wall.
   HILTI CONSTRUCTION CHEMICALS, DIV OF HILTI INC — FS-ONE Sealant, CP601S Elastomeric Firestop Sealant or CP606 Flexible Sealant.
   B. Steel Retaining Angle — No. 18 MSG (0.048 in.) galv steel angles cut to fit contour of duct with a 2 in. overlap on the duct and a min 1 in. overlap on the gypsum board assembly on both sufaces of wall. 2 in. leg of angle secured to duct with min No. 8 by 3/4 in. long sheet metal screws, spaced a max of 6 in. OC. When bead of fill material is used at joint contact locations, angles shall be installed prior to full material curing.

*Bearing the UL Classification Mark

FIRESTOP SYSTEMS
Reproduced by HILTI, Inc. Courtesy of Underwriters Laboratories, Inc. November 13, 2001

2 HILTI-W-L-7040
SCALE: N.T.S

FFKR ARCHITECTS
730 Pacific Avenue · Salt Lake City, Utah 84104
O 801.521.6186 · FFKR.COM

VBFA WWW.VBFA.COM
Murray · Logan · St. George · Tempe
181 East 5600 South 801.530.3148 T
Murray, UT 84107 801.530.3150 F
VBFA Project Number: 20405

Utah Fertility Center Outpatient Surgery Facility
1365 W Pleasant Grove Blvd, Pleasant Grove, UT 84062
UTAH FERTILITY CENTER
CONSTRUCTION DOCUMENTS - 12.MAR.2021

REGISTERED PROFESSIONAL ENGINEER
No. 11599476-2202
DALLEN BLAIR ROMRIELL
03.12.2021
STATE OF UTAH

DATE REVISION

PROJECT NUMBER 20087

MECHANICAL DETAILS

MH502

3/12/2021 1:37:43 PM

EXHAUST AIR FAN SCHEDULE

ID	MANUFACTURER AND MODEL NUMBER	LOCATION	QTY	TYPE	AIR: MAXIMUM AIRFLOW RATE (CFM)	AIR: STATIC PRESSURE (IN. H2O)	AIR: MAX AIR TEMP. (°F)	FAN: FAN SPEED (RPM)	FAN: FAN WHEEL DIA. (IN)	FAN: STATIC EFFICIENCY (%)	ELECTRICAL: MOTOR SIZE (HP)	ELECTRICAL: MOTOR BHP (HP)	ELECTRICAL: MOTOR SPEED (RPM)	ELECTRICAL: VOLT/PH/HZ	PHYSICAL: LENGTH/ WIDTH/ HEIGHT (IN)	NOTES
EF-5	COOK 100SQN12D	LEVEL 1	1	INLINE, SQUARE CENTRIF, DIRECT	280	0.45	72	1298	10	56	0.167	0.059	1500	120/1/60	22/22/15.6	1-3
EF-6	COOK 100SQN15D	LEVEL 1	1	INLINE, SQUARE CENTRIF, DIRECT	635	0.55	72	1677	10	87	0.167	0.121	1677	120/1/60	22/22/15.6	1-2
EF-7	COOK 100SQN12D	LEVEL 1	1	INLINE, SQUARE CENTRIF, DIRECT	300	0.6	72	1500	10	75	0.167	0.068	1500	120/1/60	22/22/15.6	1-2
EF-8	COOK 120SQN28D OR81 (VF)	LEVEL 1	1	INLINE, SQUARE CENTRIF, DIRECT	150	0.5	72	1161	12	24	0.334	0.048	2800	120/1/60	22/22/20	1-2
EF-9	COOK 135SQN28D OR91 (VF)	LEVEL 1	1	INLINE, SQUARE CENTRIF, DIRECT	500	0.75	72	1387	13.5	34	0.334	0.171	2800	120/1/60	22.3/22.3/22.3	1-2

1. PROVIDE FAN WITH: THERMAL OVERLOAD PROTECTION, VIBRATION ISOLATION, AND FLEXIBLE CONNECTIONS.
2. PROVIDE WITH SPEED CONTROLLER.
3. INTERCONNECT FAN WITH EXISTING OXIMETER

EXHAUST AIR LOUVER SCHEDULE

ID	MANUFACTURER AND MODEL NUMBER	LOCATION	TYPE	AIR: MAXIMUM AIRFLOW RATE (CFM)	AIR: STATIC PRESSURE (IN. H2O)	PHYSICAL: WIDTH/ HEIGHT/ THICKNESS (IN)	NOTES
L-1	RUSKIN ELF211D	LEVEL 1	STATIONARY	280	0.1	10/18/2	
L-2	COOK BV1	LEVEL 1	STATIONARY	150	0.02	16.5/4.8/4	
L-3	COOK BV1	LEVEL 1	STATIONARY	300	0.02	16.5/7.8/4	
L-4	RUSKIN ELF375DX	LEVEL 1	STATIONARY	635	0.1	12/27/4	
L-5	RUSKIN ELF375DX	LEVEL 1	STATIONARY	500	0.32	14/12/4	

HYDRONIC UNIT HEATER SCHEDULE

ID	MANUFACTURER AND MODEL NUMBER	LOCATION	TYPE	USAGE	AIR: AIRFLOW RATE (CFM)	AIR: LOAD (BTU/H)	AIR: ENTERING TEMP. DB (°F)	AIR: LEAVING TEMP. DB (°F)	FLUID: FLOW RATE (GPM)	FLUID: ENTERING/ LEAVING TEMP. (°F)	FLUID: WORKING FLUID	FLUID: HEAD LOSS (FT)	ELECTRICAL: MOTOR QUAN	ELECTRICAL: MOTOR SIZE (HP)	ELECTRICAL: MOTOR SPEED (RPM)	ELECTRICAL: VOLT/PH/HZ	PHYSICAL: MINIMUM NO. ROWS	NOTES
UH-1	MODINE HC24SB	ROOF ENCLOSURE	HORIZ, HS, SIDE	HEATING	370	8400	65	65	1.1	140/124.2	WATER	5	1	0.04	1550	120/1/60	-----	

VAV BOX SCHEDULE

ID	Manufacturer	Inlet Size Text	Cooling Airflow	Heating Airflow	Min Airflow	Entering Air Temperature	Leaving Air Temperature	S.P. Loss at Max CFM	Flow Rate	Entering Water Temperature	Leaving Water Temperature	Working Fluid	Head Loss Feet	Min. Number of Rows/Fins Per Inch	Valve Type	PIPE SIZE	Notes
V-1-01	TITUS -ESV-3	8"	420	420	145	52 °F	87 °F	0.174	2.0 GPM	140 °F	127 °F	WATER	0.785	2/10	3 Way Valve	3/4	
V-1-02	TITUS -ESV-3	8"	465	465	145	52 °F	85 °F	0.2055	2.0 GPM	140 °F	126 °F	WATER	0.785	2/10	3 Way Valve	3/4	
V-1-03	TITUS -ESV-3	10"	865	865	230	52 °F	82 °F	0.309	3.0 GPM	140 °F	124 °F	WATER	1.155	2/10	3 Way Valve	3/4	
V-1-04	TITUS -ESV-3	10"	760	760	230	52 °F	82 °F	0.25	2.0 GPM	140 °F	119 °F	WATER	0.47	2/10	3 Way Valve	3/4	
V-1-05	TITUS -ESV-3	8"	360	360	145	52 °F	88 °F	0.136	1.5 GPM	140 °F	124 °F	WATER	0.4775	2/10	3 Way Valve	3/4	
V-1-06	TITUS -ESV-3	10"	825	825	230	52 °F	80 °F	0.285	2.0 GPM	140 °F	119 °F	WATER	0.47	2/10	2 Way Valve	3/4	
V-1-07A	TITUS -ESV-3	12"	1250	1250	325	52 °F	78 °F	0.3375	2.5 GPM	140 °F	116 °F	WATER	0.95	2/10	3 Way Valve	3/4	
V-1-07B	TITUS -ESV-3	12"	1250	1250	325	52 °F	78 °F	0.3375	2.5 GPM	140 °F	116 °F	WATER	0.95	2/10	2 Way Valve	3/4	
V-1-08	TITUS -ESV-3	8"	315	315	145	52 °F	90 °F	0.109	1.5 GPM	140 °F	125 °F	WATER	0.4775	2/10	2 Way Valve	3/4	
V-1-09	TITUS -ESV-3	10"	990	990	230	52 °F	77 °F	0.393	2.0 GPM	140 °F	117 °F	WATER	0.47	2/10	2 Way Valve	3/4	
V-1-10	TITUS -ESV-3	10"	650	650	230	52 °F	84 °F	0.195	2.0 GPM	140 °F	121 °F	WATER	0.47	2/10	2 Way Valve	3/4	

FAN FILTER UNIT

ID	MANUFACTURER AND MODEL NUMBER	LOCATION	QTY	AIR: INLET SIZE (IN)	AIR: DESIGN AIRFLOW RATE (CFM)	AIR: EXTERNAL STATIC PRESSURE (IN W.C.)	ELECTRICAL: VOLTS	ELECTRICAL: PH	ELECTRICAL: HP	ELECTRICAL: AMPS	FILTER TYPE	WEIGHT (LBS)	NOTES
FFU-1.1-1.18	PRICE RSR ECM-BC 24X48	EMBRYOLOGY LAB (156)	18	10	475	0.55	208	1	1/3	2.9	HEPA	76	1-8
FFU-2.1	PRICE RSR ECM-BC 24X48	VIRTIFICATION (158)	2	12	315	0.55	208	1	1/3	2.9	HEPA	76	1-8

1. PROVIDE ROOM SIDE REPLACEABLE "EVERYTHING" INCLUDING ROOM SIDE ACCESSIBLE CONTROLS.
2. COORDINATE WITH LAY-IN CEILING SYSTEM. PROVIDE WITH GASKETED INTERFACE.
3. PROVIDE AIRFLOW INDICATOR LIGHT
4. PROVIDE DUCT COLLAR AND ELIMINATE PRE-FILTER
5. PROVIDE SINGLE CONTROLLER THAT CONTROLS MULTIPLE UNITS TO BE MOUNTED IN THE SPACE.
6. PROVIDE WITH HEPA FILTER
7. MOTORS FOR FAN FILTER UNITS SHALL BE PROVIDED WITH AN ECM MOTOR
8. PROVIDE CHALLENGE, PRESSURE PORTS,1/2 INCH AEROSOL AND PRESSURE TRANSDUCER TO FAN FILTER UNITS.

ELECTRIC HUMIDIFIER SCHEDULE

ID	MANUFACTURER AND MODEL NUMBER	LOCATION	TYPE	AIR: AIR VOLUME TO HUMIDIFY (CFM)	AIR: OUTSIDE AIR (%)	STEAM: ROOM DESIGN CONDITIONS (DB°F/RH%)	STEAM: RATED CAPACITY (LBS/HR)	STEAM: MINIMUN RANGE (LBS/HR)	WATER: FILL RATE (GPM)	WATER: DRAIN RATE (GPM)	ELECTRICAL: RATED POWER (KW)	VOLT/PH/HZ	PHYSICAL: DEPTH / WIDTH / HEIGHT (IN)
HU-1	CONDAIR EL005	LEVEL 1	ELECTRIC	95	30	75/50	5.5	1	0.2	1.6	2	120/1/60	14.4/16.5/35.4

1. INTERCONNECT TO THE BMS.

STEAM GENERATOR SCHEDULE

ID	MANUFACTURER AND MODEL NUMBER	SERVICE	AIRFLOW RATE (CFM)	STEAM PRESSURE (PSI)	CAPACITY (LB/HR)	FILL RATE (GPM)	DRAIN RATE (GPM)
SG-1	CONDAIR GSTC-100	OR/PROCEDURE ROOM/PACU	6585	ATMOS	100	2.6	5.3

1. INTERCONNECT TO BMS TO MONITOR.
2. PROVIDE WITH AN OUTDOOR ENCLOSURE AND VENT THAT EXTENDS ABOVE AIR HANDLER ENCLOSURE.

DUCT HUMIDIFIER SCHEDULE

ID	MANUFACTURER AND MODEL NUMBER	AIRFLOW RATE (CFM)	OUTSIDE AIRFLOW RATE (%)	ROOM AIR TEMP (DB/RH)	OUTSIDE AIR TEMP (DB / RH)	STEAM PRESSURE (PSI)	CAPACITY (LB / HR)	MAX. ABSORB. DISTANCE (IN)	DUCT SIZE (INxIN)	TUBE CENTERS (IN)	NOTES
DHU-1	CONDAIR	6585	40	72/30	13/59	ATM	47.7	36	24/24	3	

DIFFUSERS, REGISTERS, AND GRILLES

DIFFUSER CALLOUT	MANUFACTURER	MODEL	MAX NC	DESCRIPTION
	Price Industries	SDS 1 Slot		Surface Mounted Linear Diffuser
CD-1	PRICE	SPD	30	SQUARE PLAQUE FACE CEILING DIFFUSERS: REMOVABLE FACE, FRAME SHALL BE FOR LAY-IN MOUNTING OR SURFACE MOUNT AS REQUIRED BY CEILING TYPE. LAY-IN FRAMES SHALL BE 24"X24" OR 12"X12" AS REQUIRED TO FIT CEILING TILE SPACE AVAILABLE. HARD LID CEILING TO BE 24"X24" OR 12"X12" AS REQUIRED TO FIT CEILING SPACE AVAILABLE WITH LAY-IN PLASTER FRAME. FINISH AS SELECTED BY ARCHITECT.
CD-2	PRICE	LFD	30	LAMINAR FLOW DIFFUSER: NON-ASPIRATING, UNIDIRECTIONAL TYPE, PROVIDING A UNIFORM VERTICAL PROJECTION OF AIR AT CONTROLLED LOW VELOCITIES AND MINIMAL ENTRAINMENT OF ROOM AIR. PLENUM MATERIAL SHALL BE STEEL. FACE AND FRAME MATERIAL SHALL BE ALUMINUM. PLENUM SHALL BE SPOT WELDED. PROVIDE WITH INLET COLLAR WITH INTEGRAL BUTTERFLY STYLE VOLUME CONTROL DAMPER. COLOR SHALL BE WHITE WITH A BAKED ON POWDER COAT FINISH.
EG-1	PRICE	PDDR	30	PERFORATED GRILLE: FRAME SHALL BE FOR LAY-IN MOUNTING OR SURFACE MOUNT AS REQUIRED BY CEILING TYPE. LAY-IN FRAMES SHALL BE 24"X24" OR 24"X12" TO FIT CEILING SPACE AVAILABLE. HARD LID CEILING TO BE 24"X24" OR 12"X12" AS REQUIRED TO FIT CEILING SPACE AVAILABLE. PROVIDE ROUND NECK SIZE AS INDICATED ON DRAWINGS. FINISH AS SELECTED BY ARCHITECT.
LS-1	PRICE	SDS/SDB	30	LINEAR SLOT SUPPLY (WOOD CEILING): FRAME SHALL BE FOR LAY IN TYPE 9A INSTALLATION. PROVIDE WITH SDB PLENUM BOX WITH SIZE AS INDICATED. PROVIDE WITH SLOT WIDTHS AND QUANTITIES AS INDICATED ON THE DRAWINGS. REFER TO ARCHITETURAL DRAWINGS FOR LENGTHS OF SLOTS. FINISH AS SELECTED BY ARCHITECT.
RG-1	PRICE	PDDR	30	PERFORATED GRILLE: FRAME SHALL BE FOR LAY-IN MOUNTING OR SURFACE MOUNT AS REQUIRED BY CEILING TYPE. LAY-IN FRAMES SHALL BE 24"X24" OR 24"X12" TO FIT CEILING SPACE AVAILABLE. HARD LID CEILING TO BE 24"X24" OR 12"X12" AS REQUIRED TO FIT CEILING SPACE AVAILABLE. PROVIDE ROUND NECK SIZE AS INDICATED ON DRAWINGS. FINISH AS SELECTED BY ARCHITECT.
SWE-1	PRICE	530	30	STEEL RETURN/EXHAUST GRILLE: GRILLES SHALL BE 45 DEGREE DEFLECTION FIXED LOUVER WITH 3/4 IN. ON CENTER SPACING, BLADES SHALL RUN HORIZONTAL. PROVIDE WITH OPPOSED BLADE DAMPERS. FINISH AS SELECTED BY ARCHITECT.
SWR-1	PRICE	530	30	STEEL RETURN/EXHAUST GRILLE: GRILLES SHALL BE 45 DEGREE DEFLECTION FIXED LOUVER WITH 3/4 IN. ON CENTER SPACING, BLADES SHALL RUN HORIZONTAL. PROVIDE WITH OPPOSED BLADE DAMPERS. FINISH AS SELECTED BY ARCHITECT.

PROJECT SCHEDULE

NAME	LOCATION	OUTSIDE AIR: SCENARIO	OUTSIDE AIR: DB/WB/RH (°F/°F/%)	ALTITUDE (FT)	NOTES
UTAH FERTILITY CLINIC	PLEASANT GROVE, UT	WINTER HEATING	0/-1/71.5	4498	
		SUMMER COOLING	97/62/13.8		
		ECONOMIZER	50/41.3/50		

AIR HANDLER SCHEDULE

ID	MANUFACTURER AND MODEL NUMBER	LOCATION	AIR: SUPPLY AIRFLOW (CFM)	COMPONENTS: FANS	COMPONENTS: COILS	COMPONENTS: FILTERS	COMPONENTS: OTHER	ELECTRICAL: SINGLE POINT VOLT/PH/HZ	PHYSICAL: CABINET LENGTH/ WIDTH/HEIGHT (IN)	PHYSICAL: WEIGHT (LB)	NOTES
AH-1	AAON RN-020-8-0-E60F-5CB	LEVEL 1	8500	RRLF-AH-1, SF-AH-1	HCC-AH-1	F-AH-1		N/A	157.3/101/59.3	4110	1-2

1. UNIT SHALL BE ORDERED WITH WIRING METHOD #2. 1ST CIRCUIT POWERS THE COMPRESSORS AND CONDENSER FANS. 2ND CIRCUIT POWERS SUPPY FAN, CONTROLS, EXHAUST/RETURN FANS, PROVIDE WITH OPTIONAL POWER SWITCH FOR FIRST CIRCUIT. PROVIDE GROUNDING LUGS ON...
2. PROVIDE WITH MOTORIZED OUTSIDE AIR DAMPER.

AIR HANDLER PACKAGED AIR HEAT PUMP COIL SCHEDULE

ID	MANUFACTURER AND MODEL NUMBER	LOCATION	USAGE	AIR: AIRFLOW RATE (CFM)	AIR: LOAD (BTU/H)	AIR: SENSIBLE LOAD (BTU/H)	AIR: ENTERING TEMP. DB/WB (°F)	AIR: LEAVING TEMP. DB/WB (°F)	AIR: STATIC PRESSURE (IN. H2O)	PACKAGED REFRIGERANT: MEDIUM	PACKAGED REFRIGERANT: COP/ EER	PHYSICAL: NO. COILS	PHYSICAL: EACH COIL FIN WIDTH/ HEIGHT (IN)	PHYSICAL: MINIMUM FACE AREA (FT²)	PHYSICAL: MINIMUM NO. ROWS/ FINS PER INCH	NOTES
HCC-AH-1	AAON	AH-1	HEATING	8500	41400	41400	46.9/30.9	52/33.7	0.75	R-410A	3.21/9.5	1	90/54	33.8	4/14	1
			COOLING	8500	267800	260700	87.1/62.8	52/50.3	0.75							

1. PROVIDE WITH VARIABLE SPEED SCROLL COMPRESSORS.

AIR HANDLER SUPPLY AIR FAN SCHEDULE

ID	MANUFACTURER AND MODEL NUMBER	LOCATION	QTY	TYPE	AIR: MAXIMUM AIRFLOW RATE (CFM)	AIR: STATIC PRESSURE (IN. H2O)	AIR: MAX AIR TEMP. (°F)	FAN: FAN SPEED (RPM)	FAN: FAN WHEEL DIA. (IN)	FAN: STATIC EFFICIENCY (%)	ELECTRICAL: MOTOR SIZE (HP)	ELECTRICAL: MOTOR BHP (HP)	ELECTRICAL: MOTOR SPEED (RPM)	ELECTRICAL: VOLT/PH/HZ	PHYSICAL: LENGTH/ WIDTH/ HEIGHT (IN)	NOTES
SF-AH-1	AAON	AH-1	1	PLENUM, CENTRIFUGAL	8500	5.53	81			65	7.5	4.45	1750	208/3/60		1

1. PROVIDE WITH VFD.

AIR HANDLER RETURN/RELIEF AIR FAN SCHEDULE

ID	MANUFACTURER AND MODEL NUMBER	LOCATION	QTY	TYPE	AIR: MAXIMUM AIRFLOW RATE (CFM)	AIR: STATIC PRESSURE (IN. H2O)	AIR: MAX AIR TEMP. (°F)	FAN: FAN SPEED (RPM)	FAN: FAN WHEEL DIA. (IN)	FAN: STATIC EFFICIENCY (%)	ELECTRICAL: MOTOR SIZE (HP)	ELECTRICAL: MOTOR BHP (HP)	ELECTRICAL: MOTOR SPEED (RPM)	ELECTRICAL: VOLT/PH/HZ	PHYSICAL: LENGTH/ WIDTH/ HEIGHT (IN)	NOTES
RRLF-AH-1	AAON	AH-1	2	PLENUM, CENTRIFUGAL	3093	1.93	72			65	2	1.09	1750	208/3/60		1

1. PROVIDE WITH VFD.

AIR HANDLER FILTER SCHEDULE

ID	MANUFACTURER AND MODEL NUMBER	LOCATION	FILTRATION	TYPE	ARRANG.	AIR: CLEAN STATIC PRESSURE (IN. H2O)	AIR: DIRTY STATIC PRESSURE (IN. H2O)	PHYSICAL: NUMBER 24"X24" MODULES	PHYSICAL: NUMBER 12"X24" MODULES	NOTES
F-AH-1	FLANDERS PERFECTPLEAT ULTRA	AH-1	MERV 8	CARTRIDGE	FLAT	0.5	0.8	8	0	1-2

1. PROVIDE MERV-A RATED FILTERS
2. COORDINATE SIZE AND QUANTITIES WITH AIR HANDLER SELECTION.

FILTER SCHEDULE

ID	MANUFACTURER AND MODEL NUMBER	LOCATION	FILTRATION	TYPE	ARRANG.	AIR: CLEAN STATIC PRESSURE (IN. H2O)	AIR: DIRTY STATIC PRESSURE (IN. H2O)	PHYSICAL: NUMBER 24"X24" MODULES	PHYSICAL: NUMBER 12"X24" MODULES	NOTES
DF-1	FLANDERS VARICEL VXL	LEVEL 1	MERV 14	CARTRIDGE	ANGLED	0.7	1.3	4	0	1-2

1. PROVIDE MERV-A TYPE.
2. PROVIDE FLANDERS SURESEAL SIDE ACCESS FILTER HOUSE SIZE 20HX20W.

SPACE SCHEDULE

ID	LOCATION	HEATING: SUPPLY AIRFLOW (CFM)	HEATING: RETURN AIRFLOW (CFM)	HEATING: RELIEF AIRFLOW (CFM)	HEATING: OUTSIDE AIRFLOW (CFM)	HEATING: EXHAUST AIRFLOW (CFM)	HEATING: PRESSUR-IZATION AIRFLOW (CFM)	HEATING: VENTI-LATION AIRFLOW (CFM)	HEATING: TARGET SPACE AIR DB/RH (°F/%)	COOLING: SUPPLY AIRFLOW (CFM)	COOLING: RETURN AIRFLOW (CFM)	COOLING: RELIEF AIRFLOW (CFM)	COOLING: OUTSIDE AIRFLOW (CFM)	COOLING: EXHAUST AIRFLOW (CFM)	COOLING: PRESSUR-IZATION AIRFLOW (CFM)	COOLING: VENTI-LATION AIRFLOW (CFM)	COOLING: TARGET SPACE AIR DB/RH (°F/%)	NOTES
AH-1	LEVEL 1	8500	5950	235	2550	1585	730	2550	72/50	8500	5950	235	2550	1585	730	2550	72/50	

AIR SEPARATOR SCHEDULE

ID	MANUFACTURER AND MODEL NUMBER	LOCATION	TYPE	FLUID: FLOW (GPM)	FLUID: WORKING FLUID	FLUID: HEAD LOSS (FT)	FLUID: SYSTEM PRESSURE (PSIG)	PHYSICAL: DIA./ HEIGHT (IN)	NOTES
AS-1	TACO ACT02F	ROOF ENCLOSURE	TANK	44.8	WATER	3	30	12/22.5	1

1. ASME CERTIFIED

HYDRONIC BOILER SCHEDULE

ID	MANUFACTURER AND MODEL NUMBER	LOCATION	TYPE	FUEL TYPE	INPUT LOAD (BTU/H)	OUTPUT LOAD (BTU/H)	FLUID: FLOW RATE (GPM)	FLUID: ENTERING/ LEAVING TEMP. (°F)	FLUID: WORKING FLUID	FLUID: HEAD LOSS (FT)	ELECTRICAL: MOTOR QUAN.	ELECTRICAL: MOTOR SIZE (HP)	ELECTRICAL: MOTOR VOLT/PH/HZ	ELECTRICAL: CONTROL CIRCUIT VOLT/PH/HZ	PHYSICAL: STACK DIAMETER (IN)	PHYSICAL: LENGTH/ WIDTH/ HEIGHT (IN)	NOTES
B-1	AERCO AM 500B	ROOF ENCLOSURE	CONDENSING, FORCED	NAT GAS	434200	350800	35.8	120.1/140	WATER	30					1@4	34.8/23.6/45.7	1-3

1. ASME CERTIFIED
2. SINGLE POINT CONNECTION: 15 AMP, 120/1/60
3. UNIT WILL BE SEALED COMBUSTION CAPABLE.

CONDENSATE NEUTRALIZER SCHEDULE

ID	MANUFACTURER AND MODEL NUMBER	LOCATION	QTY	TYPE	CONDENSATE DEVICE: INPUT LOAD (BTU/H)	CONDENSATE DEVICE: EFFICIENCY (%)	PHYSICAL: LENGTH/ WIDTH/ HEIGHT (IN)	PHYSICAL: NPT FITTING (IN)	NOTES
CN-1	AXIOM NC-2	LEVEL 1	1	STANDARD	434200	95	24.5/3.6/4	0.75	

EXPANSION TANK SCHEDULE

ID	MANUFACTURER AND MODEL NUMBER	LOCATION	TYPE	FLUID: WORKING FLUID	FLUID: MIN. TANK/ ACCEPTANCE VOLUME (GAL)	FLUID: MINIMUM FILL PRESSURE (PSIG)	FLUID: MAXIMUM WORKING PRESSURE (PSIG)	FLUID: RELIEF VALVE PRESSURE (PSIG)	PHYSICAL: TANK SIZE (GAL)	PHYSICAL: DIA./ HEIGHT (IN)	PHYSICAL: NPT FITTING (IN)	NOTES
ET-1	TACO CA-90	ROOF ENCLOSURE	VERT BLADDER, FULL	WATER	4.4/1.6	12.7	27	30	23	20/29.1	0.5	1

1. ASME CERTIFIED

PUMP SCHEDULE

ID	MANUFACTURER AND MODEL NUMBER	LOCATION	TYPE	FLUID: FLOW RATE (GPM)	FLUID: WORKING FLUID	FLUID: HEAD LOSS (FT)	PUMP: EFFICIENCY (%)	PUMP: CONSTRUCTION	ELECTRICAL: MOTOR SIZE (HP)	ELECTRICAL: MOTOR BHP (HP)	ELECTRICAL: MOTOR SPEED (RPM)	ELECTRICAL: VOLT/PH/HZ	NOTES
P-1	TACO KS1509	ROOF ENCLOSURE	VERTICAL INLINE	35.8	WATER	88.5	37.3	BRONZE FITTED	5	2.122	1760	208/3/60	1

1. PROVIDE PUMP WITH VFD BY MECHANICAL.

FFKR ARCHITECTS
730 Pacific Avenue · Salt Lake City, Utah 84104
O 801.521.6186 · FFKR.COM

VBFA WWW.VBFA.COM
Murray · Logan · St. George · Tempe
181 East 5600 South 801.530.3148 T
Murray, UT 84107 801.530.3150 F
VBFA Project Number: 20405

Utah Fertility Center Outpatient Surgery Facility
1365 W Pleasant Grove Blvd, Pleasant Grove, UT 84062
UTAH FERTILITY CENTER
CONSTRUCTION DOCUMENTS - 12.MAR.2021

REGISTERED PROFESSIONAL ENGINEER
No. 11599476-2202
DALLEN BLAIR ROMRIELL
03.12.2021
STATE OF UTAH

△ DATE REVISION

PROJECT NUMBER 20087

MECHANICAL SCHEDULES

MH601

3/12/2021 2:07:18 PM

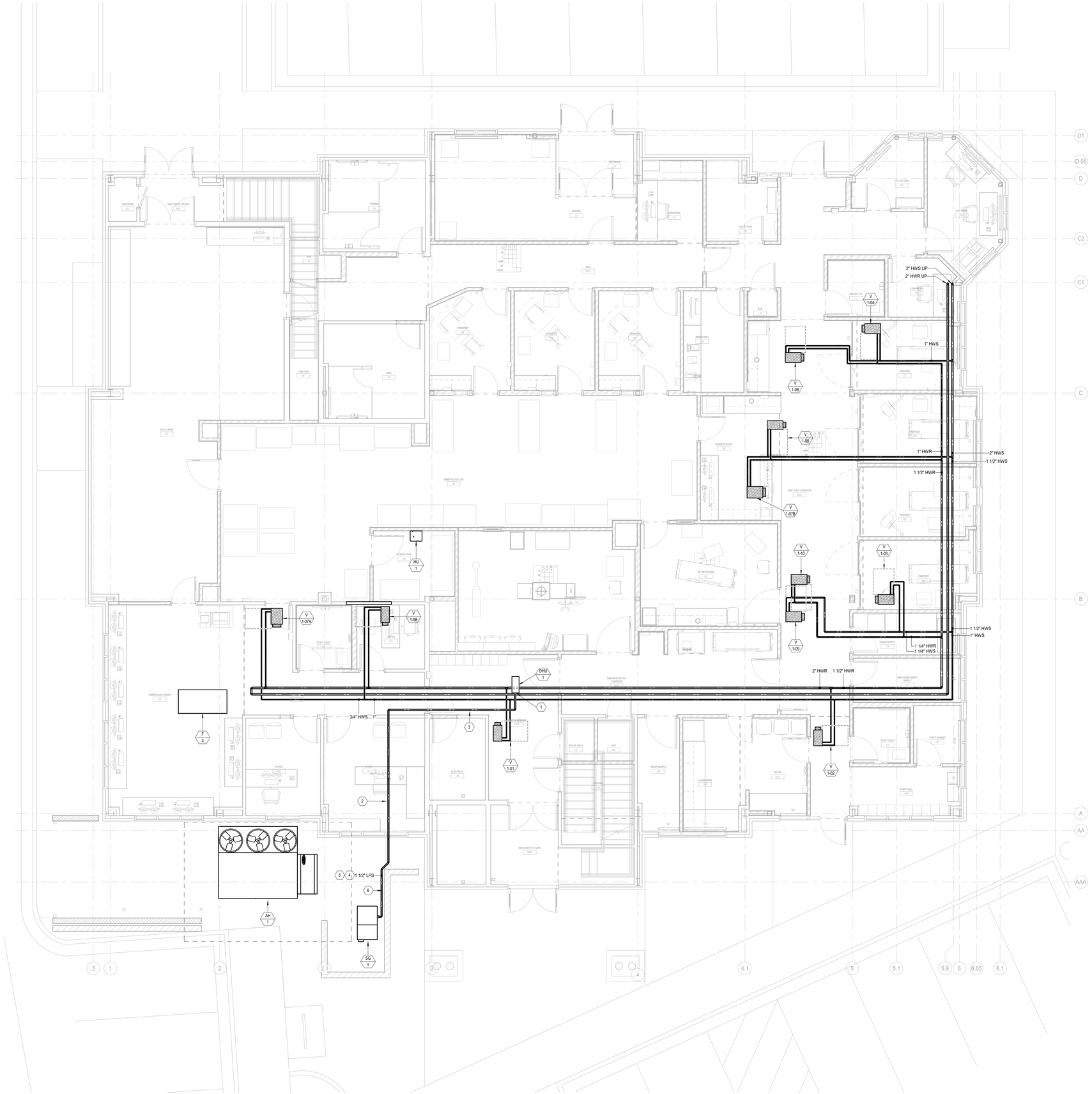

1 MECHANICAL PIPING PLAN LEVEL 1

SCALE: 1/4" = 1'-0"

REFERENCE NOTES

1. PROVIDE CONDENSATE TRAP AT DISTRIBUTOR. RUN CONDENSATE TO SERVICE SINK IN EVS (145)
2. PIPING MATERIALS FOR STEAM AND CONDENSATE LINES TO BE COPPER MED-L TUBING.
3. STEAM LINE SHALL SLOPE TOWARDS HUMIDIFIER. PROVIDE TRAPS REGULARLY EVERY 20 FEET AND AT ALL DIRECTIONAL CHANGES. RUN CONDENSATE TO NEAREST SERVICE SINK. CONTRACTOR RESPONSIBLE FOR UNDERSTANDING AND FOLLOWING ALL OF THE MANUFACTURER REQUIREMENTS INCLUDING THE CONDAIR STEAM DISTRIBUTION INSTALLATION MANUAL.
4. PIPE RUN SHALL NOT EXCEED AN EQUIVALENT LENGTH OF 70 FT. EACH STANDARD ELBOW EQUALS 3.5FT AND EACH STANDARD 45° ELBOW EQUALS 1.75 FT.
5. SEE SPECIFICATION FOR PIPE INSULATION REQUIREMENTS.
6. MOUNT STEAM LINE ON ENCLOSURE WALL.

FFKR ARCHITECTS
730 Pacific Avenue - Salt Lake City, Utah 84104
O 801.521.6186 - FFKR.COM

VBFA WWW.VBFA.COM
Murray - Logan - St. George - Tempe
181 East 5600 South 801.530.3148 T
Murray, UT 84107 801.530.3150 F
VBFA Project Number: 20465

Utah Fertility Center Outpatient Surgery Facility
1365 W Pleasant Grove Blvd, Pleasant Grove, UT 84062
UTAH FERTILITY CENTER
CONSTRUCTION DOCUMENTS - 12.MAR.2021

REGISTERED PROFESSIONAL ENGINEER
No. 11599476-2202
DALLEN BLAIR ROMRIELL
03.12.2021
STATE OF UTAH

△	DATE	REVISION

PROJECT NUMBER 20087

MECHANICAL PIPING PLAN LEVEL 1

MP101

3/12/2021 1:37:46 PM

REFERENCE NOTES

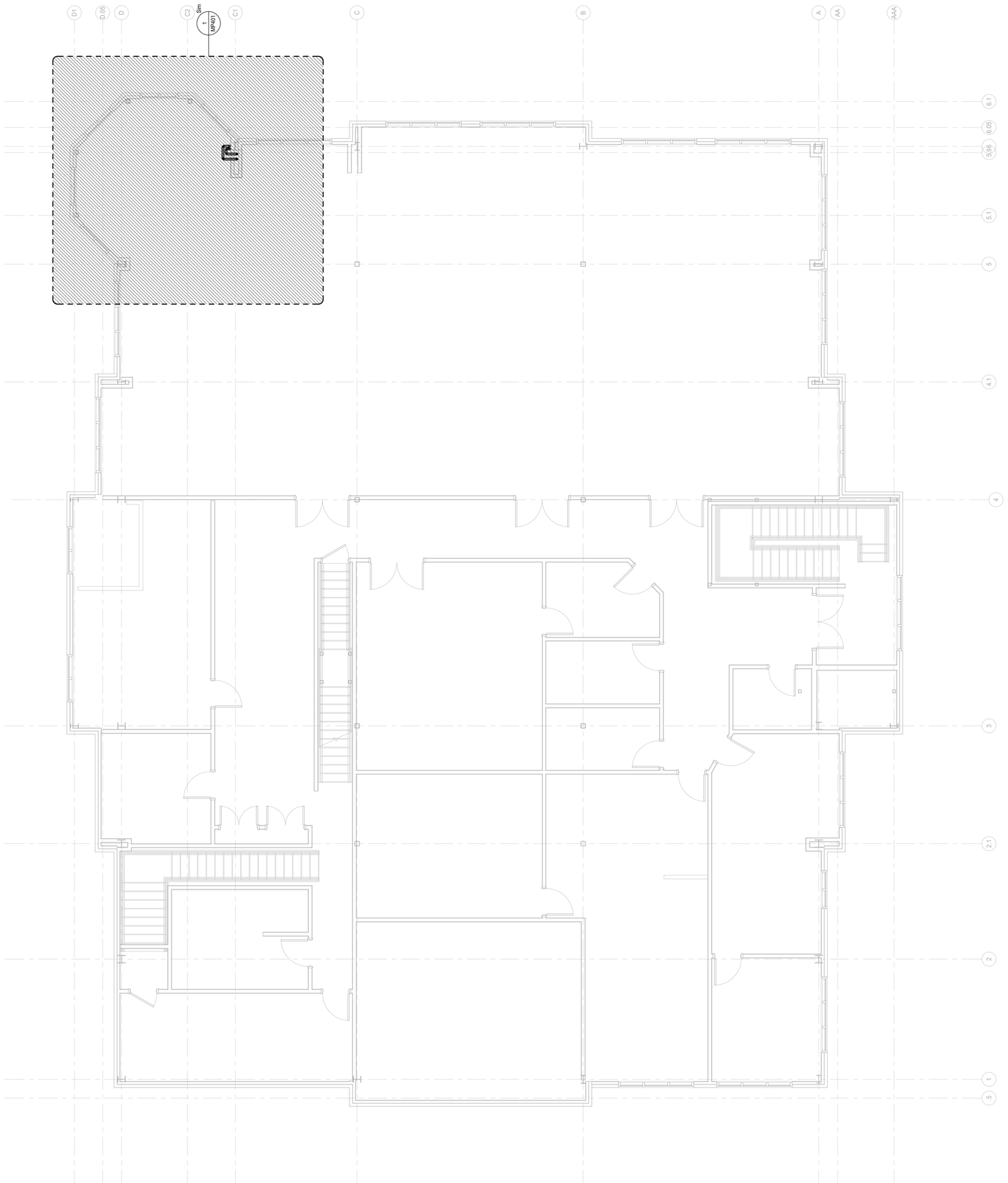

1 MECHANICAL PIPING PLAN LEVEL 2
SCALE: 1/4" = 1'-0"

3/12/2021 1:37:47 PM

Utah Fertility Center Outpatient Surgery Facility
1365 W Pleasant Grove Blvd, Pleasant Grove, UT 84062
UTAH FERTILITY CENTER
CONSTRUCTION DOCUMENTS - 12.MAR.2021

△ DATE REVISION

PROJECT NUMBER 20087

MECHANICAL
PIPING
PLAN
LEVEL 2

MP102

VBFA WWW.VBFA.COM
Murray · Logan · St. George · Tempe
181 East 5600 South 801.530.3146 T
Murray, UT 84107 801.530.3150 F
VBFA Project Number: 20405

FFKR ARCHITECTS
730 Pacific Avenue · Salt Lake City, Utah 84104
O 801.521.6186 · FFKR.COM

REFERENCE NOTES

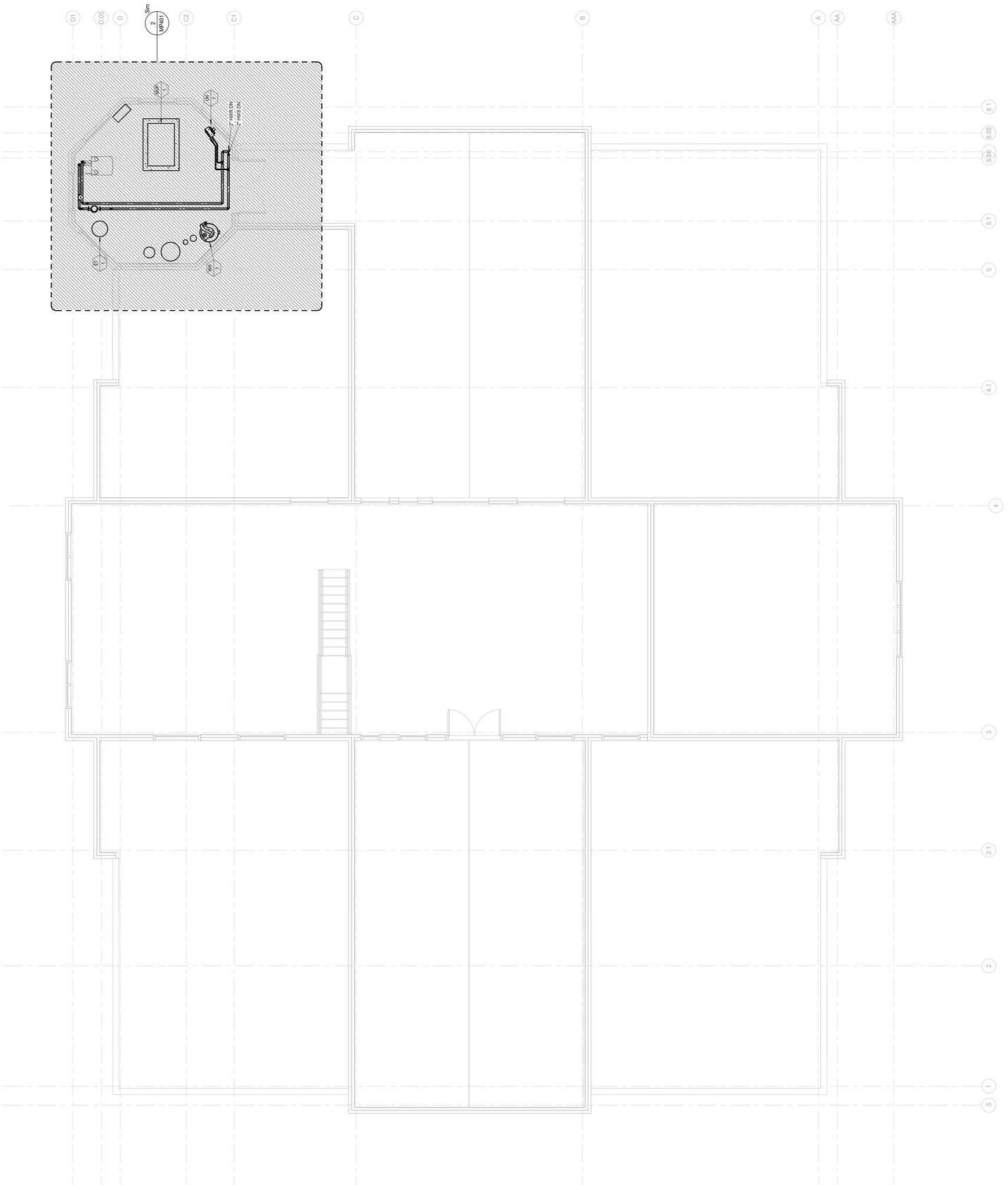

MECHANICAL PIPING PLAN LEVEL 3

1

SCALE: 1/4" = 1'-0"

3/12/2021 1:37:47 PM

Utah Fertility Center Outpatient Surgery Facility
1365 W Pleasant Grove Blvd, Pleasant Grove, UT 84062
UTAH FERTILITY CENTER
CONSTRUCTION DOCUMENTS - 12.MAR.2021

△ DATE REVISION

PROJECT NUMBER 20087

MECHANICAL
PIPING
PLAN
LEVEL 3

MP103

VBFA WWW.VBFA.COM
Murray · Logan · St. George · Tempe
181 East 5600 South 801.530.3146 T
Murray, UT 84107 801.530.3150 F
VBFA Project Number: 20405

FFKR ARCHITECTS
730 Pacific Avenue · Salt Lake City, Utah 84104
O 801.521.6186 · FFKR.COM

REFERENCE NOTES

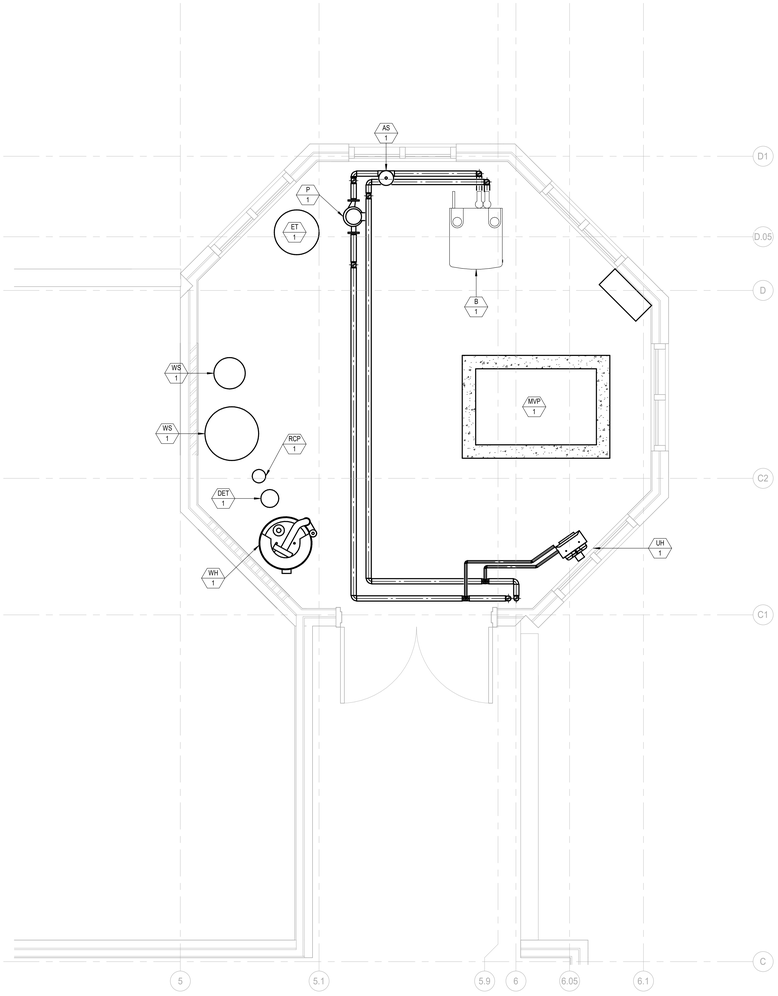

2 ENLARGED MECHANICAL PIPING PLAN LEVEL 3
SCALE: 1/2" = 1'-0"

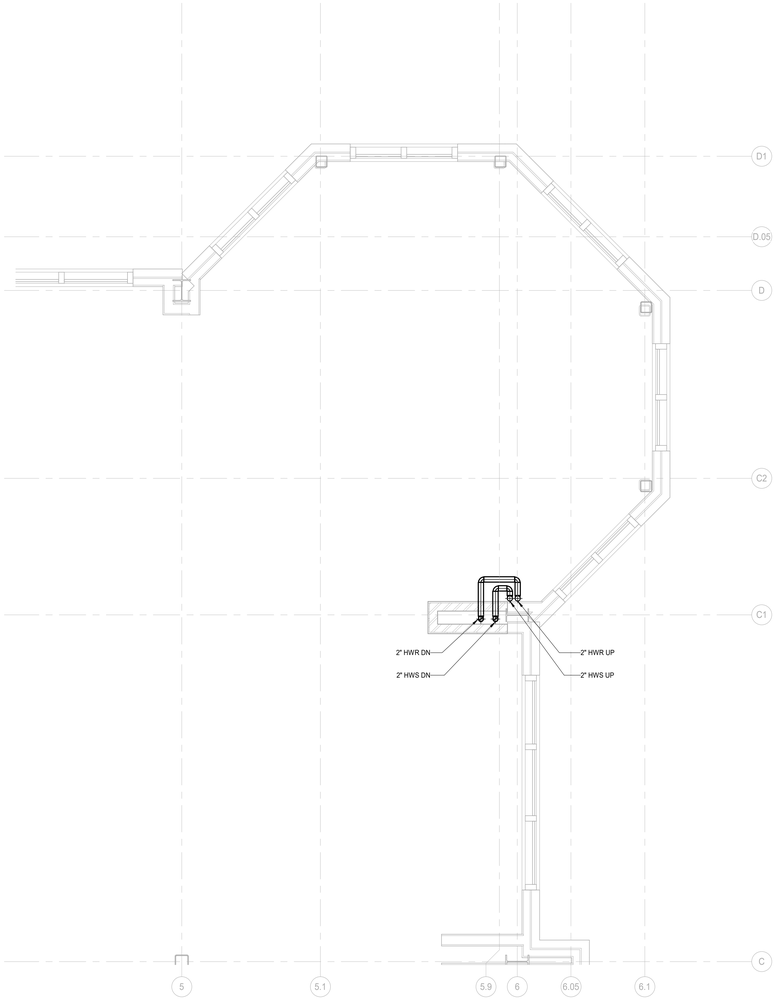

1 ENLARGED MECHANICAL PIPING PLAN LEVEL 2
SCALE: 1/2" = 1'-0"

FFKR ARCHITECTS
730 Pacific Avenue - Salt Lake City, Utah 84104
O 801.521.6186 - FFKR.COM

VBFA
Murray - Logan - St. George - Tempe
181 East 5600 South
Murray, UT 84107
VBFA Project Number: 20405
801.530.3148 T
801.530.3150 F

Utah Fertility Center Outpatient Surgery Facility
1365 W Pleasant Grove Blvd, Pleasant Grove, UT 84062
UTAH FERTILITY CENTER
CONSTRUCTION DOCUMENTS - 12.MAR.2021

REGISTERED PROFESSIONAL ENGINEER
No. 11599476-2202
DALLEN BLAIR ROMRIELL
03.12.2021
STATE OF UTAH

△	DATE	REVISION

PROJECT NUMBER 20087

ENLARGED MECHANICAL PIPING PLANS

MP401

3/12/2021 1:37:48 PM

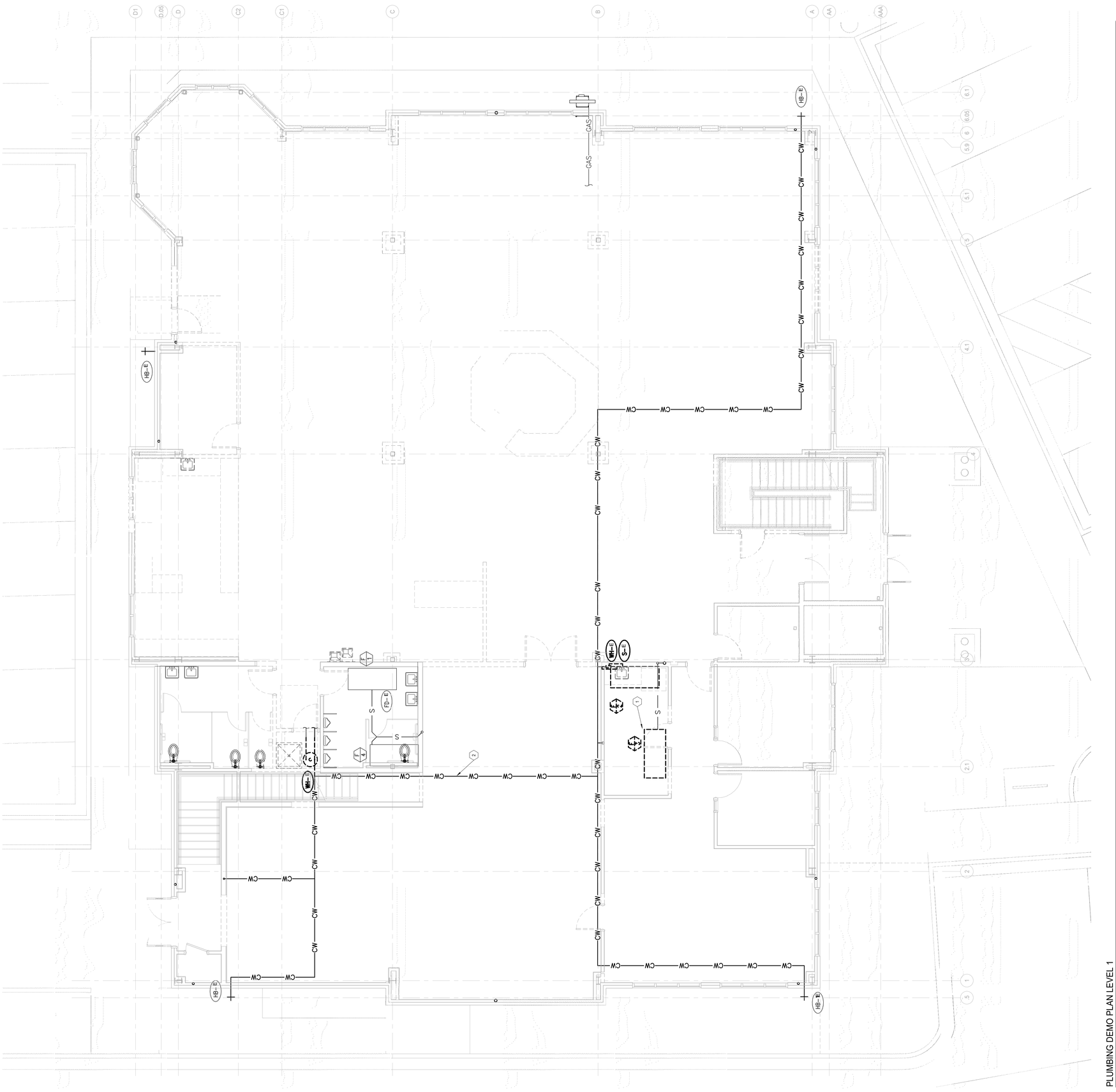

1 PLUMBING DEMO PLAN LEVEL 1

SCALE: 1/4" = 1'-0"

REFERENCE NOTES

1. EXISTING ELEMENTS SHOWN DARK AND DASHED TO BE DEMOLISHED, TYPICAL
2. EXISTING ELEMETNS SHOWN LIGHTER TO REAMIN, TYPICAL

FFKR ARCHITECTS
730 Pacific Avenue · Salt Lake City, Utah 84104
O 801.521.6186 · FFKR.COM

VBFA
www.vbfa.com
Murray · Logan · St. George · Tempe
181 East 5600 South 801.530.3148 T
Murray, UT 84107 801.530.3150 F
VBFA Project Number: 20405

Utah Fertility Center Outpatient Surgery Facility
1365 W Pleasant Grove Blvd, Pleasant Grove, UT 84062
UTAH FERTILITY CENTER
CONSTRUCTION DOCUMENTS - 12.MAR.2021

REGISTERED PROFESSIONAL ENGINEER
DALLEN BLAIR ROMRELL
05.12.2021
STATE OF UTAH

△	DATE	REVISION

PROJECT NUMBER 20087

PLUMBING DEMO PLAN LEVEL 1

PD101

3/12/2021 1:37:55 PM

REFERENCE NOTES

1. EXISTING ELEMENTS SHOWN LIGHT, TYPICAL.
2. INVERT AT 4'-10" AT THIS LOCATION.

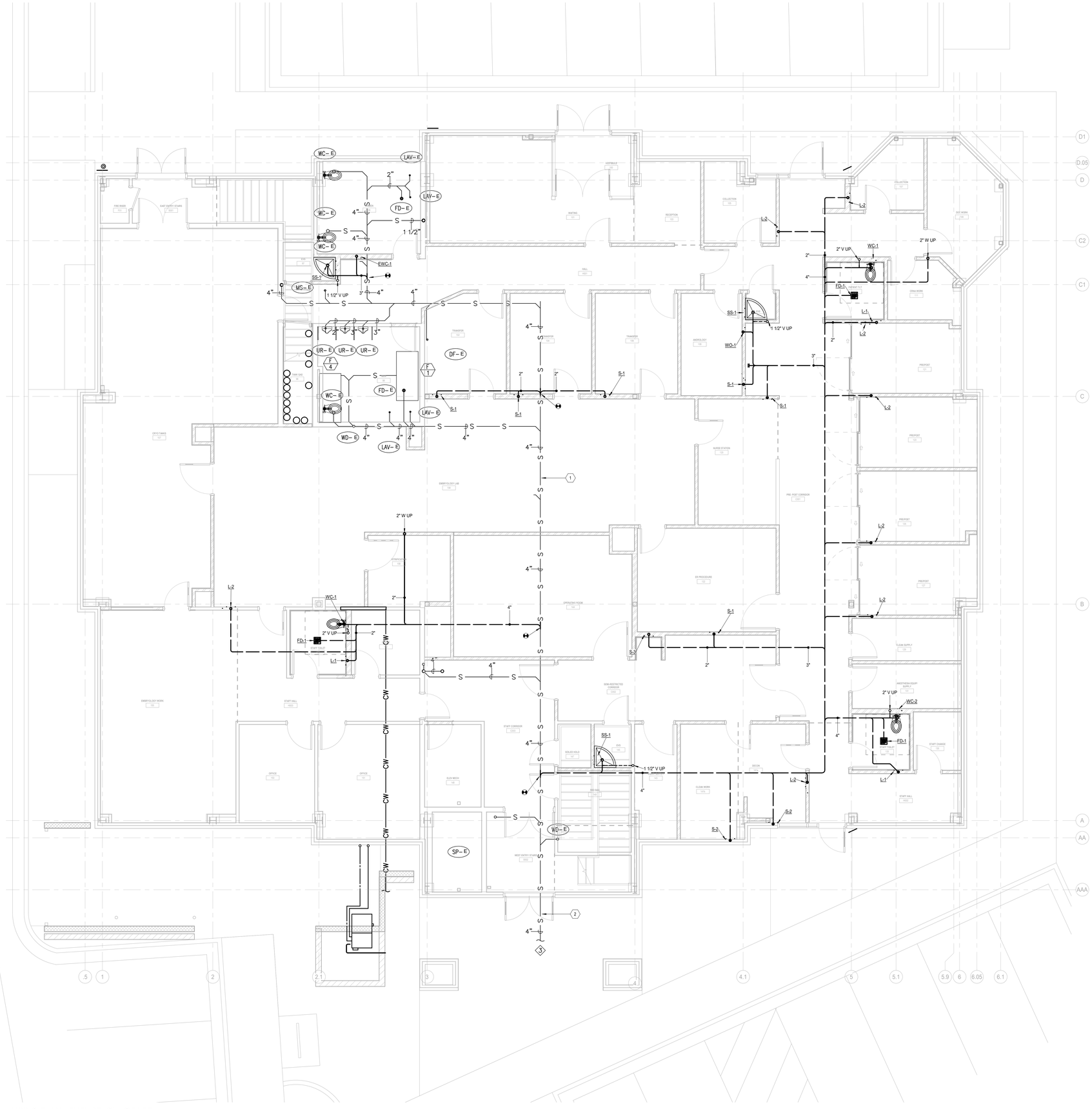

1 PLUMBING PLAN LEVEL BELOW GRADE

SCALE: 1/4" = 1'-0"

FFKR ARCHITECTS
730 Pacific Avenue - Salt Lake City, Utah 84104
O 801.521.6186 - FFKR.COM

VBFA
WWW.VBFA.COM
Murray - Logan - St. George - Tempe
181 East 5600 South 801.530.3148 T
Murray, UT 84107 801.530.3150 F
VBFA Project Number: 20405

Utah Fertility Center Outpatient Surgery Facility
1365 W Pleasant Grove Blvd, Pleasant Grove, UT 84062
UTAH FERTILITY CENTER
CONSTRUCTION DOCUMENTS - 12.MAR.2021

REGISTERED PROFESSIONAL ENGINEER
No. 11599476-2202
DALLEN BLAIR ROMRIELL
03.12.2021
STATE OF UTAH

DATE	REVISION

PROJECT NUMBER 20087

PLUMBING PLAN BELOW GRADE

PP100

3/12/2021 1:37:56 PM

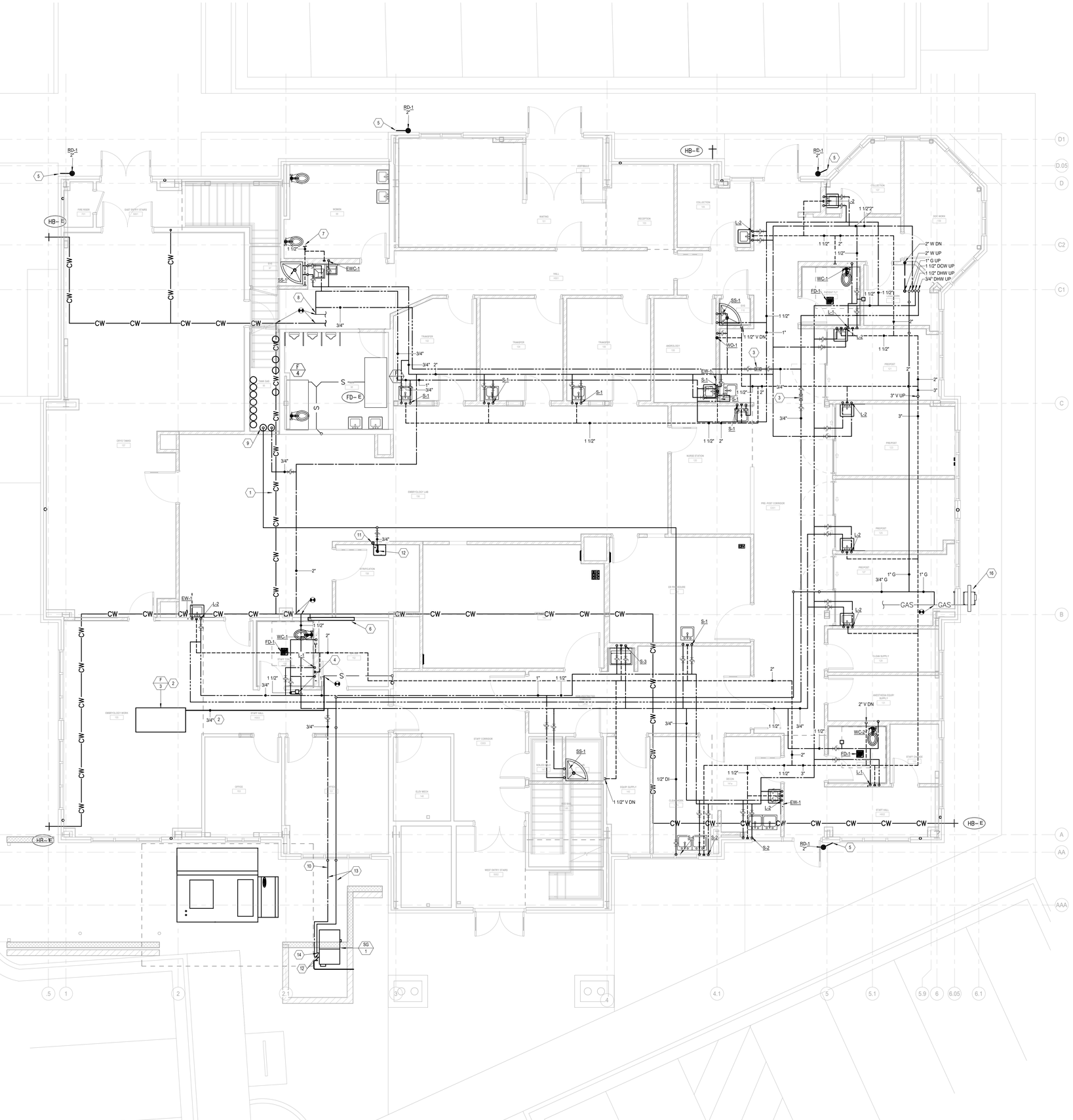

1 PLUMBING PLAN LEVEL 1
SCALE: 1/4" = 1'-0"

REFERENCE NOTES

1. EXISTING ELEMENTS SHOWN LIGHT, TYPICAL.
2. RELOCATE EXISTING GAS LINE AND CONDENSATE LINE TO NEW FURNACE LOCATION.
3. SET BALANCING VALVE TO 1 GPM.
4. PROVIDE WATER HAMMER ARRESTORS AT ALL QUICK ACTING VALVES, TYPICAL.
5. RUN DOWN WALL AND DISCHARGE INTO LANDSCAPING.
6. EXISTING PRV. PROVIDE ACCESS PANEL.
7. CONNECT VENT LINES TO EXISTING VENT STACK FOR TOILET GROUP.
8. CONNECT TO EXISTING HOT WATER LINE FROM DEMOLISHED WATER HEATER.
9. DI WATER EXCHANGE TANKS PROVIDED BY OWNER.
10. PROVIDE SELF REGULATING 5 W/LF HEAT TRACING ON EXPOSED PIPING.
11. MAKE FINAL DRAIN CONNECTION TO HUMIDIFY. DROP WASTE DOWN WALL AND CONNECT TO WASTE MAIN.
12. MAKE FINAL UTILITY CONNECTIONS TO EQUIPMENT PER MANUFACTURER RECOMMENDATIONS.
13. RUN PIPING AT GRADE LEVEL UTILIZING MIRO SUPPORTS.
14. PROVIDE PRV TO MODULATE DOWN TO REQUIRED PRESSURE AT EQUIPMENT FROM 2LBS GAS.
15. RELOCATED CONDENSATE LINE.
16. EXISTING GAS LOAD WITH FUTURE LOADS WAS 1401 MBH. ADDED GAS LOAD IS 716 MBH. LONGEST PIPE RUN FROM EXISTING PROJECT WAS 175 FEET AND THE LONGEST RUN HAS NOT CHANGED (CONTRACTOR TO VERIFY DISTANCES).

FFKR ARCHITECTS
730 Pacific Avenue - Salt Lake City, Utah 84104
O 801.521.6186 - FFKR.COM

VBFA WWW.VBFA.COM
Murray - Logan - St. George - Tempe
181 East 5600 South 801.530.3148 T
Murray, UT 84107 801.530.3150 F
VBFA Project Number: 20405

Utah Fertility Center Outpatient Surgery Facility
1365 W Pleasant Grove Blvd, Pleasant Grove, UT 84062
UTAH FERTILITY CENTER
CONSTRUCTION DOCUMENTS - 12.MAR.2021

REGISTERED PROFESSIONAL ENGINEER
No. 11599476-2202
DALLEN BLAIR ROMRIELL
03.12.2021
STATE OF UTAH

△	DATE	REVISION

PROJECT NUMBER 20087

PLUMBING PLAN LEVEL 1

PP101

3/12/2021 1:38:00 PM

REFERENCE NOTES

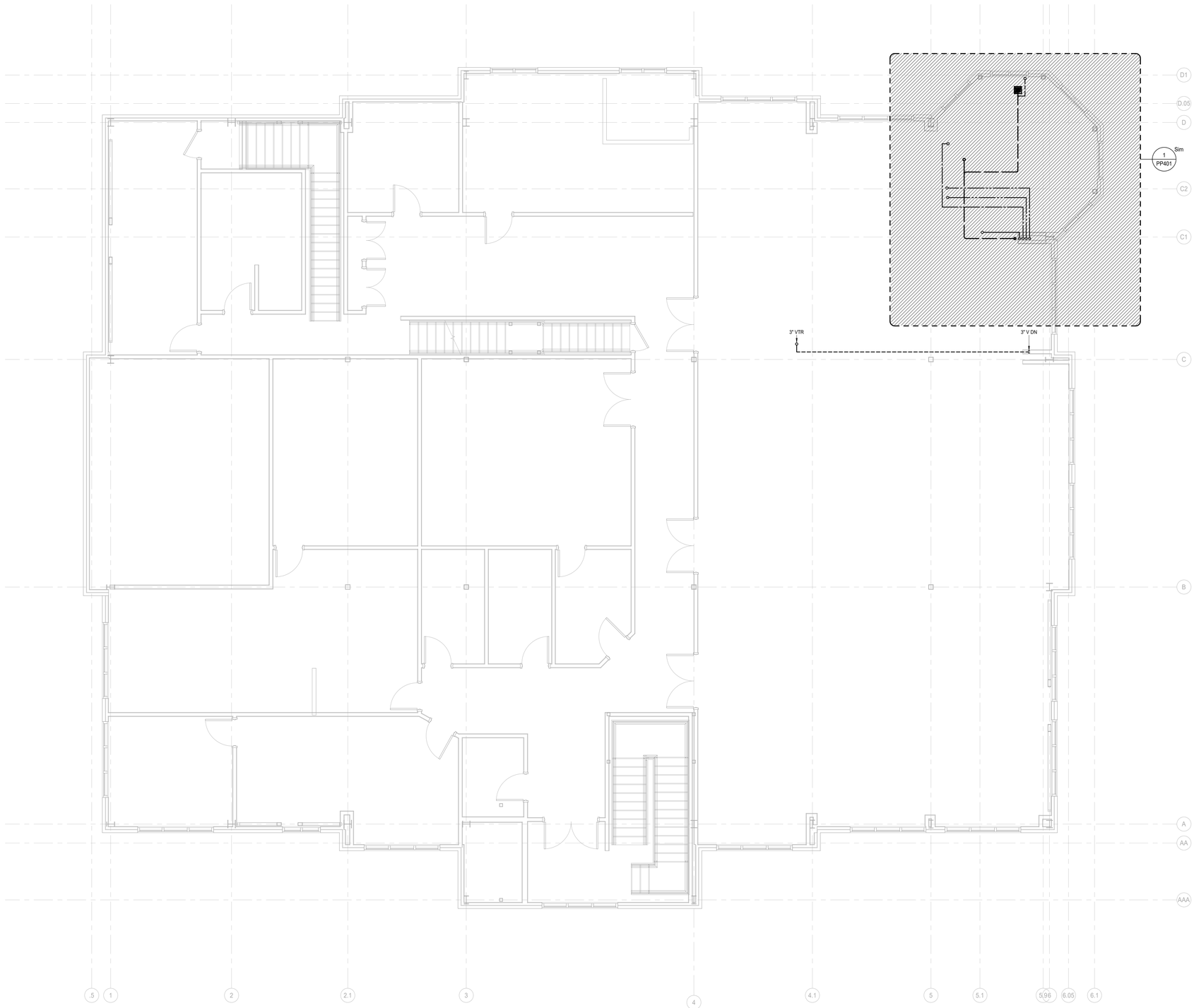

1 PLUMBING PLAN LEVEL 2

SCALE: 1/4" = 1'-0"

FFKR ARCHITECTS
730 Pacific Avenue - Salt Lake City, Utah 84104
O 801.521.6186 - FFKR.COM

VBFA WWW.VBFA.COM
Murray - Logan - St. George - Tempe
181 East 5600 South 801.530.3148 T
Murray, UT 84107 801.530.3150 F
VBFA Project Number: 20465

Utah Fertility Center Outpatient Surgery Facility
1365 W Pleasant Grove Blvd, Pleasant Grove, UT 84062
UTAH FERTILITY CENTER
CONSTRUCTION DOCUMENTS - 12.MAR.2021

REGISTERED PROFESSIONAL ENGINEER
No. 11599476-2202
DALLEN BLAIR ROMRIELL
03.12.2021
STATE OF UTAH

△	DATE	REVISION

PROJECT NUMBER 20087

PLUMBING PLAN LEVEL 2

PP102

3/12/2021 1:38:00 PM

REFERENCE NOTES

1. VENT TO BE INSTALLED 10' FROM ALL OPENINGS INTO THE BUILDING.

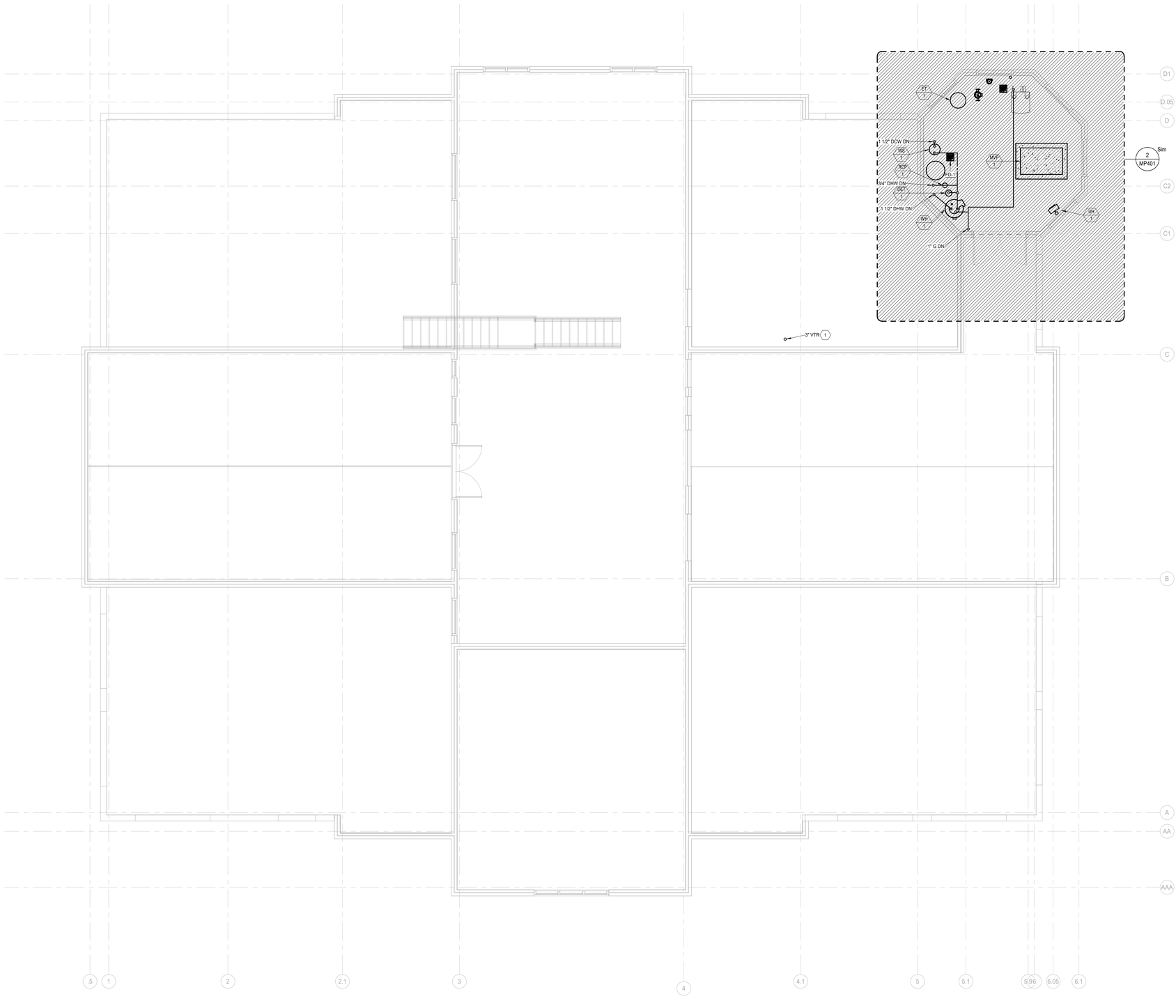

1 PLUMBING PLAN LEVEL 3

SCALE: 1/4" = 1'-0"

FFKR ARCHITECTS
730 Pacific Avenue - Salt Lake City, Utah 84104
O 801.521.6186 - FFKR.COM

VBFA
WWW.VBFA.COM
Murray - Logan - St. George - Tempe
181 East 5600 South 801.530.3148 T
Murray, UT 84107 801.530.3150 F
VBFA Project Number: 20465

Utah Fertility Center Outpatient Surgery Facility
1365 W Pleasant Grove Blvd, Pleasant Grove, UT 84062
UTAH FERTILITY CENTER
CONSTRUCTION DOCUMENTS - 12.MAR.2021

REGISTERED PROFESSIONAL ENGINEER
No. 11599476-2202
DALLEN BLAIR ROMRIELL
03.12.2021
STATE OF UTAH

△	DATE	REVISION

PROJECT NUMBER 20087

PLUMBING PLAN LEVEL 3

PP103

3/12/2021 1:38:00 PM

REFERENCE NOTES

1. PROVIDE 2 LB TO 4 OZ PRV AT EQUIPMENT.

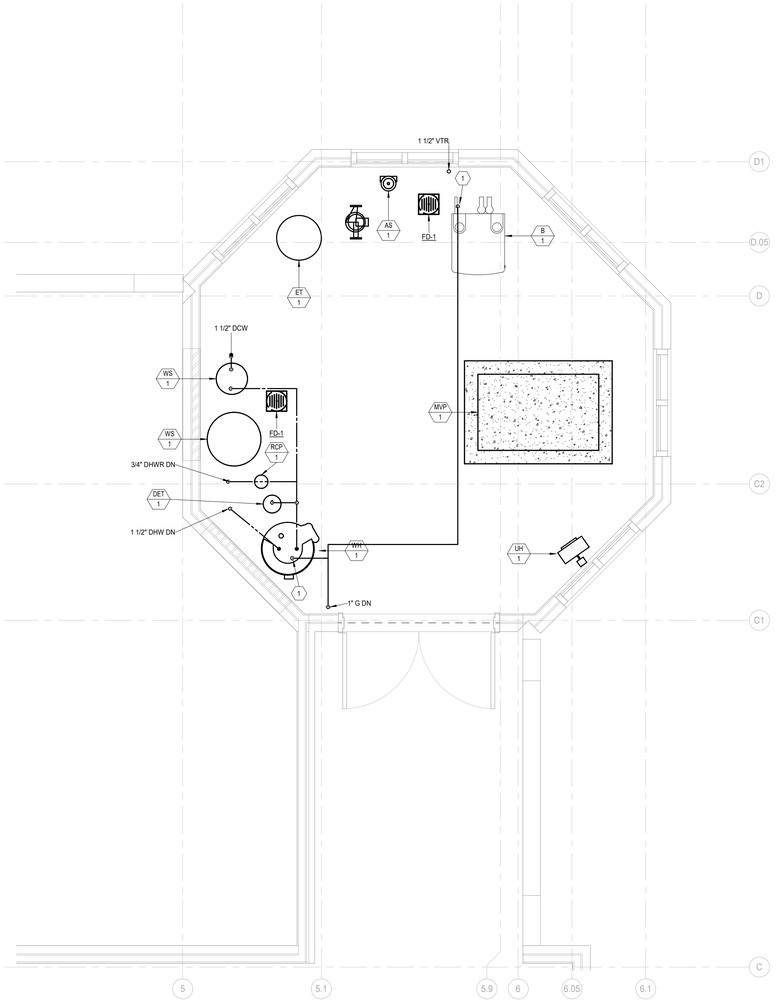

2 ENLARGED PLUMBING PLAN LEVEL 3

SCALE: 1/2" = 1'-0"

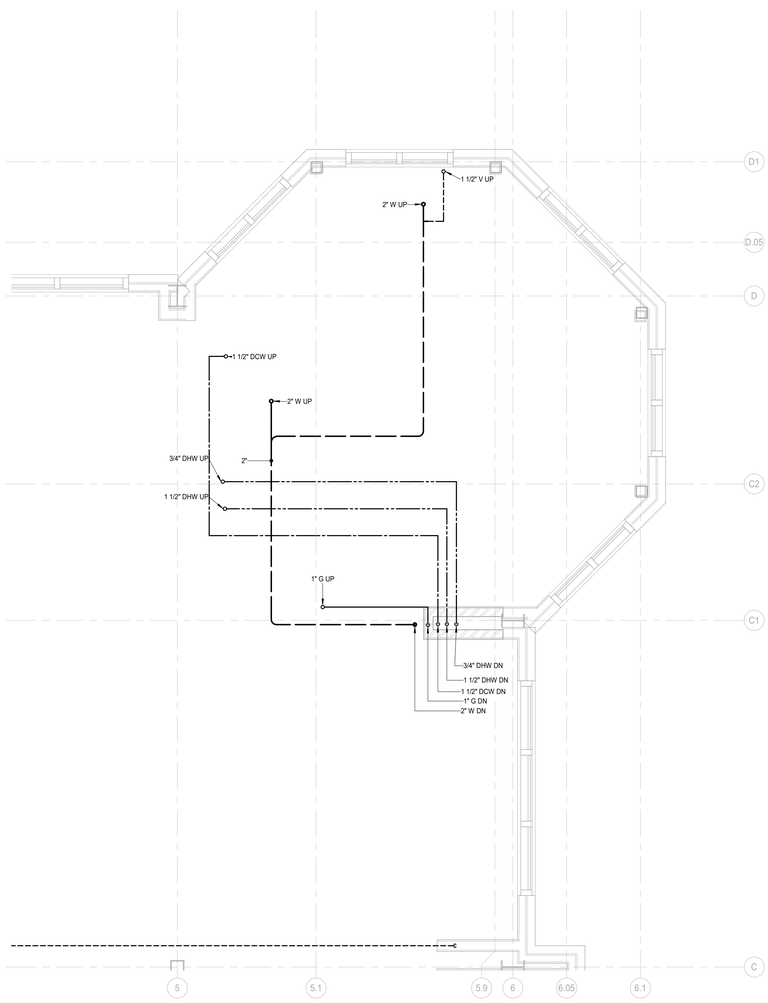

1 ENLARGED PLUMBING PLAN LEVEL 2

SCALE: 1/2" = 1'-0"

FFKR ARCHITECTS
730 Pacific Avenue - Salt Lake City, Utah 84104
O 801.521.6186 - FFKR.COM

VBFA
WWW.VBFA.COM
Murray - Logan - St. George - Tempe
181 East 5600 South 801.530.3148 T
Murray, UT 84107 801.530.3150 F
VBFA Project Number: 20405

Utah Fertility Center Outpatient Surgery Facility
1365 W Pleasant Grove Blvd, Pleasant Grove, UT 84062
UTAH FERTILITY CENTER
CONSTRUCTION DOCUMENTS - 12.MAR.2021

△	DATE	REVISION

PROJECT NUMBER 20087

ENLARGED PLUMBING PLANS

PP401

3/12/2021 1:38:01 PM

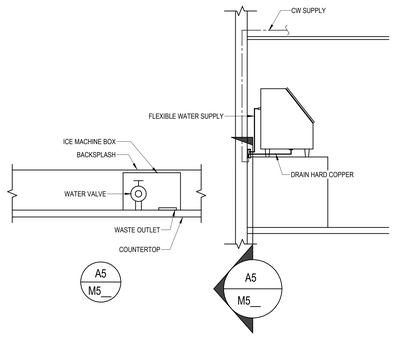

7 ICE MACHINE DETAIL
SCALE: N.T.S

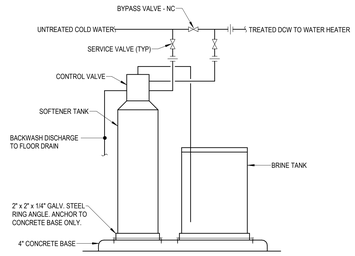

8 WATER SOFTENER, SIMPLEX DETAIL
SCALE: N.T.S

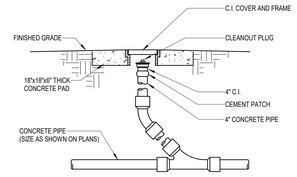

1 CLEANOUT TO GRADE DETAIL (COTG)
SCALE: N.T.S

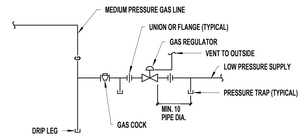

2 MEDIUM-TO-LOW PRESSURE GAS REGULATOR DETAIL
SCALE: N.T.S

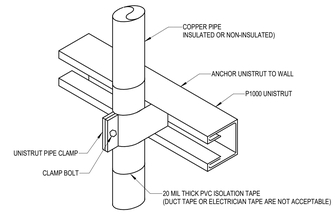

3 PIPE SUPPORT DETAIL
SCALE: N.T.S

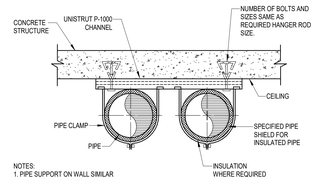

NOTES:
1. PIPE SUPPORT ON WALL SIMILAR

4 PIPE SUPPORT ON CEILING
SCALE: N.T.S

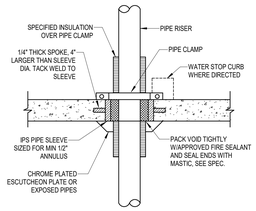

5 PIPE THROUGH FLOOR SLAB DETAIL
SCALE: N.T.S

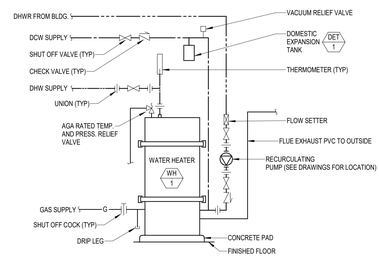

6 WATER HEATER DETAIL
SCALE: N.T.S

FFKR ARCHITECTS
730 Pacific Avenue - Salt Lake City, Utah 84104
O 801.521.6186 - FFKR.COM

VBFA
WWW.VBFA.COM
Murray - Logan - St. George - Tempe
181 East 5600 South
Murray, UT 84107
VBFA Project Number: 20405
801.530.3148 T
801.530.3150 F

Utah Fertility Center Outpatient Surgery Facility
1365 W Pleasant Grove Blvd, Pleasant Grove, UT 84062
UTAH FERTILITY CENTER
CONSTRUCTION DOCUMENTS - 12.MAR.2021

REGISTERED PROFESSIONAL ENGINEER
No. 11599476-2202
DALLEN BLAIR ROMRIELL
03.12.2021
STATE OF UTAH

△	DATE	REVISION

PROJECT NUMBER 20087

PLUMBING DETAILS

PP501

3/12/2021 1:38:02 PM

PLUMBING FIXTURE SCHEDULE

ID	FIXTURE	CW (IN)	HW (IN)	W (IN)	V (IN)	DESCRIPTION	SPECIFICATION
EW-1	EMERGENCY EYEWASH	1/2	1/2	---	---	WALL HUNG EYEWASH/DRENCH HOSE	GUARDIAN G5026BP EYEWASH/DRENCH HOSE WALL MOUNTED UNITS WITH SLOAN ETF-470-A SINGLE CHECK VALVES ON HOT AND COLD LINES AND GUARDIAN G3600LF THERMOSTATIC MIXING VALVE. INSTALL THE EYEWASH/DRENCH HOSE UNIT ON THE WALL NEXT TO THE LAVATORY. INSTALL THE MIXING VALVE ABOVE THE CEILING WITH THE OUTLET TEMPERATURE SET TO 75-80°F.
EWC-1	PUBLIC ELECTRIC WATER COOLER	1/2	---	1-1/2	1-1/2	DUAL STATION, BOTTLE FILLER	ELECTRIC WATER COOLER: ELKAY EZH20 LZSTL8WSLP DUAL STATION, WALL MOUNTED WITH BOTTLE FILLING STATION, BARRIER FREE, ADA ELECTRIC WATER COOLER WITH FLEXIIBLE SAFETY BUBBLER, STAINLESS STEEL BOWLS AND CONTROL BUTTONS ON FRONT AND SIDES. COMPRESSOR TO BE 115V, 60 HZ WITH CAPACITY TO DELIVER AT LEAST 8.0 GPH OF 50°F WATER. 1-1/2" CAST BRASS CHROME-PLATED P-TRAPS. COORDINATE THE ADA SIDE WITH THE ARCHITECT.
FD-1	FLOOR DRAIN	---	---	2	1-1/2	FLOOR DRAIN	FLOOR DRAIN: SMITH FIGURE 2005Y-P050 FLOOR DRAIN WITH CAST IRON BODY AND FLASHING COLLAR WITH 6-INCH ROUND NICKEL BRONZE ADJUSTABLE STRAINER HEAD WITH SECURED GRATE. PROVIDE TRAP GUARD TYPE TRAP SEAL DEVICE.
L-1	PUBLIC LAVATORY	1/2	1/2	1-1/2	1-1/2	SLOTED VANITY SINK, 0.5 GPM	LAVATORY: WALL MOUNTED LAVATORY PROVIDED BY ARCHITECT. KOHLER COMPOSED K-73060-4 FAUCET WITH 0.5 GPM FLOW RATE, LESS POP UP DRAIN. WATTS LFUSG-B-M2 THERMOSTATIC MIXING VALVE WITH SLOAN ETF-470-A SINGLE CHECK VALVES ON HOT AND COLD LINES. FLEXIBLE STAINLESS STEEL SUPPLIES WITH 1/4 TURN ANGLE STOPS. CAST BRASS P-TRAP WITH CLEANOUT PLUG. PROVIDE ADA COMPLIANT UNDER COUNTER PIPING WRAP BY TRUE-BRO, COLOR TO BE WHITE.
L-2	PRIVATE LAVATORY	1/2	1/2	1-1/2	1-1/2	WALL HUNG, VITREOUS CHINA, GOOSENECK FAUCET WITH WRISTBLADES, 1.5 GPM	LAVATORY: KOHLER K2030, GREENWICH, 20" X 18", VITREOUS CHINA, WITH FRONT OVERFLOW, 8" CENTERS. CHICAGO 786-GN2FCXKABCP FAUCET, WITH WRIST BLADE HANDLES, GN2 5-1/4" RIGID/SWING GOOSENECK WITH PLAIN END SPOUT AND 1.5 GPM LAMINAR FLOW CONTROL IN SPOUT INLET. FLEXIBLE STAINLESS STEEL SUPPLIES WITH 1/4 TURN ANGLE STOPS. CHICAGO 327-XCP OPEN-GRID STRAINER AND CAST BRASS P-TRAP WITH CLEANOUT PLUG. SMITH 0700-Z CONCEALED ARM CHAIR CARRIER WITH FOOT SUPPORT. PROVIDE ADA COMPLIANT UNDER COUNTER PIPING WRAP BY TRUE-BRO, COLOR TO BE WHITE
RD-1	ROOF DRAIN	---	---	---	---	SEE PLANS FOR SIZE	ROOF DRAIN: SMITH FIGURE 1620T LOW DOME BOTTOM OUTLET, FLASHING CLAMP AND CAST IRON DOME.
S-1	TYPICAL SINK	1/2	1/2	2	1-1/2	SINGLE BOWL STAINLESS STEEL DROP IN, GOOSENECK FAUCET WITH WRISTEBLADES	SINK: JUST SLN-1815-A 12" X 12" X 7-1/2" I.D. UNDERCOUNTER MOUNT 18 GA. STAINLESS STEEL SINK, INTEGRA STAINLESS STEEL FLAT GRID AND CENTER DRAIN LOCATION. CHICAGO 786-GN2FCXKABCP FAUCET, WITH WRIST BLADE HANDLES, 5-1/4" GN2 RIGID/SWING GOOSENECK SPOUT WITH 1.5 GPM LAMINAR FLOW CONTROL IN SPOUT INLET. FLEXIBLE STAINLESS STEEL SUPPLIES WITH 1/4 TURN ANGLE STOPS AND CAST BRASS P-TRAP WITH CLEANOUT PLUG.
S-2	WORK SINK	1/2	1/2	2	1-1/2	DOUBLE BOWL, STAINLESS STEEL, DROP IN	SINK: JUST DLXDN-2237-A-GR TWO 16" X 16" X 12" I.D. BOWLS, UNDERMOUNT 18 GA. STAINLESS STEEL SINK, INTEGRA STAINLESS STEEL FLAT GRID AND CENTER DRAIN LOCATION. CHICAGO 200-301355AB FAUCET, WITH WRIST BLADE HANDLES, 14" L15LEOJKAB RIGID/SWING L SPOUT WITH 2.2 GPM LAMINAR FLOW CONTROL E29JKABCP. FLEXIBLE STAINLESS STEEL SUPPLIES WITH 1/4 TURN ANGLE STOPS AND CAST BRASS P-TRAP WITH CLEANOUT PLUG.
S-3	SCRUB SINK	1/2	1/2	2	1-1/2	PEDESTAL BASE WITH TIMER AND EYE WASH	SCRUB SINK: MAC MEDICAL SURGICAL SS32-PB WITH PEDESTAL BASE. PROVIDE WITH SCRUB TIMER AND EYEWASH. PROVIDE FLEXIBLE STAINLESS STEEL SUPPLIES WITH LOOSE KEY ANGLE STOPS AND CAST BRASS P-TRAP WITH CLEAN OUT PLUG.
S-4	PURE WATER SINK	1/2	---	---	---	PURE WATER GOOSENECK FAUCET	DI WATER FAUCET: CHICAGO 969-217XLHCTF TIN-LINED LABORATORY PURE WATER FAUCET, WITH 2-1/2" CROSS HANDLE AND 5-1/4" RIGID/SWING GOOSENECK SPOUT. PROVIDE WITH FLEXIBLE SUPPLY AND ANGLE STOP APPLICABLE FOR PURE WATER SYSTEMS
SS-1	CORNER MOUNTED SERVICE SINK	1/2	1/2	3	1-1/2	CORNER FLOOR MOUNTED	SERVICE SINK (FLOOR MOUNTED): KOHLER K6710, WHITBY, 28 X 28-INCH, ENAMELED CAST IRON FLOOR-MOUNTED CORNER MODEL, K9146-3" DRAIN WITH STRAINER, NO. K8940 REMOVABLE VINYL-COATED RIM GUARD; CHICAGO 897-CP FAUCET WITH VACUUM BREAKER, HOSE CONNECTION, SCREWDRIVER STOPS IN SHANKS, 5 FOOT RUBBER HOSE AND CHICAGO 853 WALL HOOK.
WC-1	FLOOR MOUNTED WATER CLOSET	1	---	4	2	FLOOR MOUNTED MANUAL FLUSH VALVE	WATER CLOSET: KOHLER K-96057 HIGHCLIFF ULTRA VITREOUS CHINA, FLOOR MOUNTED, ELONGATED BOWL, 1-1/2" TOP SPUD, ADA TOILET WITH K-4670-C LUSTRA OPEN-FRONT SEAT. SLOAN ROYAL-111-1.28 GPF FLUSH VALVE; INSTALL ACTUATOR ON WIDE SIDE OF FIXTURE.
WC-2	FLOOR MOUNTED WATER CLOSET WITH BEDPAN WASHER	1	---	4	2	FLOOR MOUNTED, MANUAL FLUSH VALVE, BEDPAN LUGS	WATER CLOSET: KOHLER K-96057 HIGHCLIFF VITREOUS CHINA, FLOOR MOUNTED, ELONGATED BOWL, 1-1/2" TOP SPUD, WITH K-4670-C LUSTRA OPEN-FRONT SEAT. SLOAN WES-BPW-1100-1.6/1.1 GAL FLUSH VALVE WITH GRAB BAR OFFSET AND BEDPAN WASHER DIVERTER ASSEMBLY. PLACE HANDLE ON WIDE SIDE OF STALL. COORDINATE MOUNTING HIEGHT WITH ARCHITECTURAL DAWINGS.
WO-1	WATER OUTLET	1/2	---	2	1-1/2	FLUSH MOUNTED IN WALL, WATER SUPPLY, DRAIN	WATER OUTLET BOX: WATER-TITE 82148 WASHING MACHINE OUTLET BOX WITH DRAIN QUARTER TURN BALL VALVE WITH WATER ARRESTOR FOR USE WITH ICE MACHINE. INSTALL ONLY COLD WATER BALL VALVE. NOTCH COUNTERTOP BACK-SPLASH AND INSTALL OUTLET BOX DRAIN FLUSH WITH COUNTERTOP. MATCH ARCHITECTURAL ELEVATIONS.

1. ALL BELOW GRADE PIPING SHALL BE 2" OR GREATER.

GAS FIRED WATER HEATER SCHEDULE

ID	MANUFACTURER AND MODEL NUMBER	LOCATION	INPUT LOAD (BTUH)	UEF	TYPE	RECOVERY RATE @ 90 F DELTA T	TANK SIZE (GAL)	FLUE SIZE (IN)	HEIGHT/ DIAMETER (IN)	NOTES
WH-1	AO SMITH BTX-80	ROOF ENCLOSURE	76000	0.66	TANK	95	50	2	68.75/27	1

1. PROVIDE WITH CONDENSATE NUETRALIZER KIT.

DOMESTIC EXPANSION TANK SCHEDULE

				FLUID		PHYSICAL				
ID	MANUFACTURER AND MODEL NUMBER	LOCATION	TYPE	WORKING FLUID	MIN. TANK/ ACCEPTANCE (GAL)	TANK SIZE (GAL)	RELIEF VALVE (PSIG)	DIA./ HEIGHT (IN)	NPT FITTING (IN)	NOTES
DET-1	AMTROL ST-5-C	ROOF ENCLOSURE	DOMESTIC	WATER	0.9	2	150	8/14	0.75	1

1. TANK LINER SUITABLE FOR POTABLE WATER

PUMP SCHEDULE

				FLUID			PUMP		ELECTRICAL		
ID	MANUFACTURER AND MODEL NUMBER	LOCATION	TYPE	FLOW RATE (GPM)	WORKING FLUID	HEAD LOSS (FT)	EFFICIENCY (%)	CONSTRUCTION	MOTOR SIZE (W)	VOLT/PH/HZ	NOTES
RCP-1	B&G e3 4VBUXYZ	ROOF ENCLOSURE	ECM	2	WATER	4.5	---	LEAD FREE	28	120/1/60	

WATER SOFTENER SCHEDULE

ID	MANUFACTURER AND MODEL NUMBER	LOCATION	TYPE	TOTAL (GRAINS)	NORMAL / MAX WATER FLOW/UNIT @ 15/25 PSI LOSS	BACKWASH FLOW RATE (GPM)	RESIN QUANTITY (FT^3)	RESIN TANK HGHT/DIA (IN/IN)	BRINE TANK HGHT/DIA (IN/IN)	ELECTRICAL (VOLT/PH)	NOTES
WS-1	WATER SPECIALTIES A954-90	ROOF ENCLOSURE	SIMPLEX	90,000	33/44	4.2	3	65/14	41/24	120/1	1

1. PACKAGED EQUIPMENT

MEDICAL GAS OUTLETS SCHEDULE

		# OF OUTLETS							PIPE DROP SIZE TO OUTLET(S)						
SYMBOL	ROOM TYPE	O2	MA	MV	WAGD	N20	NO	CO2	O2	MA	MV	WAGD	N20	NO	REMARKS
MO-1	PRE/POST	1	-.-	1	-.-	-.-	-.-	-.-	1/2	-.-	1	-.-	-.-	-.-	1,2
MO-2	OR	2	1	3	-.-	-.-	-.-	-.-	3/4	3/4	1	-.-	-.-	-.-	
MO-3	PROCEDURE ROOM	1	-.-	1	-.-	-.-	-.-	-.-	1/2	-.-	1	-.-	-.-	-.-	

UNLESS NOTED OTHERWISE, ALL OUTLETS ARE CHEMETRON-STYLE QUICK-CONNECTS
OUTLETS IN "MEDICAL EQUIPMENT" ARE SUPPLIED WITH THE PIECE OF EQUIPMENT
REFER TO ARCHITECTURAL ELEVATIONS AND REFLECTED CEILING PLANS FOR EXACT LOCATION AND PLACEMENT OF OUTLETS.
1. PIPE DROP SIZES ARE FOR ONE SET OF OUTLETS
2. WALL MOUNTED OUTLETS

MEDICAL GAS VALVE SCHEDULE

		PIPE SIZE (INCHES)							
SYMBOL	AREA SERVED	O2	MA	MV	WAGD	N20	N	CA	REMARKS
MV-1	PRE/POST	3/4	-.-	1	-.-	-.-	-.-	-.-	1,2
MV-2	OR	3/4	3/4	1	-.-	-.-	-.-	-.-	1,2
MV-3	PROCEDURE ROOM	3/4	-.-	1	-.-	-.-	-.-	-.-	1,2

1. ALL VALVE BOXES TO COME WITH WITH GAUGES
2. PROVIDE MED GAS ALARM TRANSDUCERS IN VALVE BOX ON ROOM SIDE OF VALVE.

MEDICAL GAS ALARM PANEL SCHEDULE

			SERVICES TO BE MONITORED						
SYMBOL	STATIONS MONITORED	LOCATION	OX	MA	MV	N	N2O	CO2	REMARKS
MA-1	PRE/POST	SEE PLANS	X	-.-	X	-.-	-.-	-.-	
MA-2	OR	SEE PLANS	X	X	X	-.-	-.-	-.-	
MA-3	PROCEDURE ROOM	SEE PLANS	X	-.-	X	-.-	-.-	-.-	
MA-4	MASTER ALARM PANEL 1	SEE PLANS	X	X	X	-.-	-.-	-.-	
MA-5	MASTER ALARM PANEL 2	SEE PLANS	X	X	X	-.-	-.-	-.-	

MEDICAL VACUUM PUMP SCHEDULE

							RECEIVER			MOTOR			SIZE	
ID	MANUFACTURER AND MODEL NUMBER	LOCATION	SERVICE	TYPE	MINIMUM FLOW EA. PUMP @ 19" HG (SCFM)	SYSTEM FLOW (SCFM)	RECEIVER SIZE (GAL)	RECEIVER TYPE	HEIGHT/ DIA. (IN)	HP EACH MOTOR	RPM	VOLT/PH	LENGTH/ WIDTH/ HEIGHT (IN)	NOTES
MVP-1	POWEREX VVTD0153	LEVEL 3	MEDICAL	DUPLEX	18	10	80	VERTICAL	-	1.5	-	208/3	54/34/85	1,2,3,4,5,6

1. LUBRICATED ROTARY VANE DUPLEX PUMP PACKAGE, SINGLE POINT CONNECTION, SKID MOUNTED. ISOLATION VALVES AND SERVICE DISCONNECTS FOR EACH PUMP MOTOR.
2. CAPACITIES SHOWN ARE SEA LEVEL CAPACITIES
3. PACKAGE TO INCLUDE FRAME, TANK, FILTERS AND CONTROL PANEL
4. PACKAGE SHALL INCLUDE STARTERS
5. PACKAGE TO BE ON EMERGENCY POWER
6. PROVIDE WITH EMS HEALTHCARE TOM-2095B, TOTAL OXIDIZER MONITORING AND MITIGATION SYSTEM.

FFKR ARCHITECTS
730 Pacific Avenue · Salt Lake City, Utah 84104
O 801.521.6186 · FFKR.COM

VBFA WWW.VBFA.COM
Murray · Logan · St. George · Tempe
181 East 5600 South 801.530.3148 T
Murray, UT 84107 801.530.3150 F
VBFA Project Number: 20405

Utah Fertility Center Outpatient Surgery Facility
1365 W Pleasant Grove Blvd, Pleasant Grove, UT 84062
UTAH FERTILITY CENTER
CONSTRUCTION DOCUMENTS - 12.MAR.2021

REGISTERED PROFESSIONAL ENGINEER
No. 11599476-2202
DALLEN BLAIR ROMRIELL
03.12.2021
STATE OF UTAH

△ DATE REVISION

PROJECT NUMBER 20087

PLUMBING SCHEDULES

PP601

3/12/2021 1:38:02 PM

REFERENCE NOTES

1. MED GAS ALARMS TO STACK VERTICALLY.
2. CONNECT TO TRANSDUCERS WITHIN VALVE BOX, SEE NOTE ON SCHEDULE.
3. OXYGEN MANIFOLD. PROVIDE BEACON MEDAES MODEL NUMBER MNE-HH-2X2-O2-AS.
4. MEDICAL AIR MANIFOLD. PROVIDE BEACON MEDAES MODEL NUMBER MNE-HH-2X2-AIR-AS.
5. PROVIDE STORAGE RACKS FOR MED GAS CYLINDERS WITH HIGH AND LOW CHAIN RESTRAINTS. USA SAFETY MODEL NUMBER BR2X1FS.
6. CARBON DIOXIDE MANIFOLD. PROVIDE BEACON MEDAES MODEL NUMBER MNE-HH-1X1-CO2-AS.
7. PROVIDE STORAGE RACKS FOR MED GAS CYLINDERS WITH HIGH AND LOW CHAIN RESTRAINTS. USA SAFETY MODEL NUMBER BR1X1FS.
8. PROVIDE STORAGE RACKS FOR MED GAS CYLINDERS WITH HIGH AND LOW CHAIN RESTRAINTS. USA SAFETY MODEL NUMBER BR4X1FS.
9. CO2 MANIFOLD. PROVIDE BEACON MEDAES MODEL NUMBER MNE-HH-1X1-CO2-AS.
10. MIXED AIR MANIFOLD. PROVIDE BEACON MEDAES MODEL NUMBER MNE-HH-2X2-O2-AS WITH BEACON MEDAES FLB SINGLE GAUGE BRASS LINE REGULATOR.
11. PROVIDE OXYGEN DEPLETION MONITOR FOR MANIFOLD ROOM.
12. PROVIDE 3/4" MIXED AIR DROP TO WALL MOUNTED CHICAGO GAS TURRET. HEIGHT TO BE COORDINATED WITH ARCHITECT, TYPICAL.

1 MEDICAL GAS PLAN LEVEL 1
SCALE: 1/4" = 1'-0"

FFKR ARCHITECTS
730 Pacific Avenue - Salt Lake City, Utah 84104
O 801.521.0186 - FFKR.COM

VBFA www.VBFA.com
Mark Logan Bc. Jason Trone
181 East 6965 South 801.530.3148 T
Murray, UT 84107 801.530.3159 F
VBFA Project Number: 20486

Utah Fertility Center Outpatient Surgery Facility
1365 W Pleasant Grove Blvd, Pleasant Grove, UT 84062
UTAH FERTILITY CENTER
CONSTRUCTION DOCUMENTS - 12.MAR.2021

REGISTERED PROFESSIONAL ENGINEER
No. 11599476-2202
DALLEN BLAIR ROMRIELL
03.12.2021
STATE OF UTAH

△ DATE REVISION

PROJECT NUMBER 20087

MEDICAL GAS PLAN LEVEL 1

MG101

3/12/2021 1:37:25 PM

REFERENCE NOTES

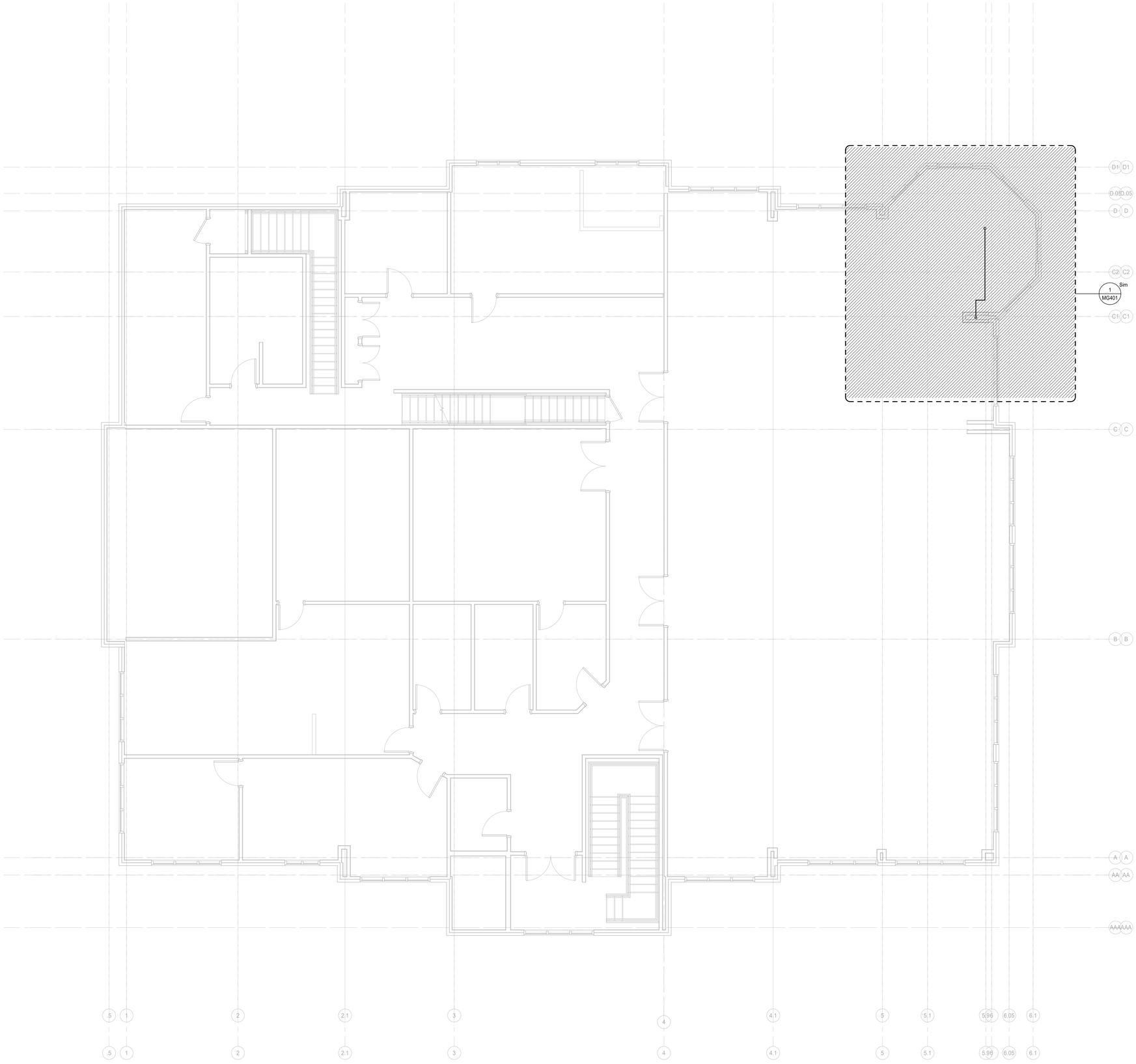

1 MEDICAL GAS PLAN LEVEL 2

SCALE: 1/4" = 1'-0"

FFKR ARCHITECTS
730 Pacific Avenue - Salt Lake City, Utah 84104
O 801.521.6186 - FFKR.COM

VBFA
WWW.VBFA.COM
Murray - Logan - St. George - Tempe
181 East 5600 South 801.530.3148 T
Murray, UT 84107 801.530.3150 F
VBFA Project Number: 20405

Utah Fertility Center Outpatient Surgery Facility
1365 W Pleasant Grove Blvd, Pleasant Grove, UT 84062
UTAH FERTILITY CENTER
CONSTRUCTION DOCUMENTS - 12.MAR.2021

REGISTERED PROFESSIONAL ENGINEER
No. 11599476-2202
DALLEN BLAIR ROMRIELL
03.12.2021
STATE OF UTAH

△	DATE	REVISION

PROJECT NUMBER 20087

MEDICAL GAS PLAN LEVEL 2

MG102

3/12/2021 1:37:25 PM

REFERENCE NOTES

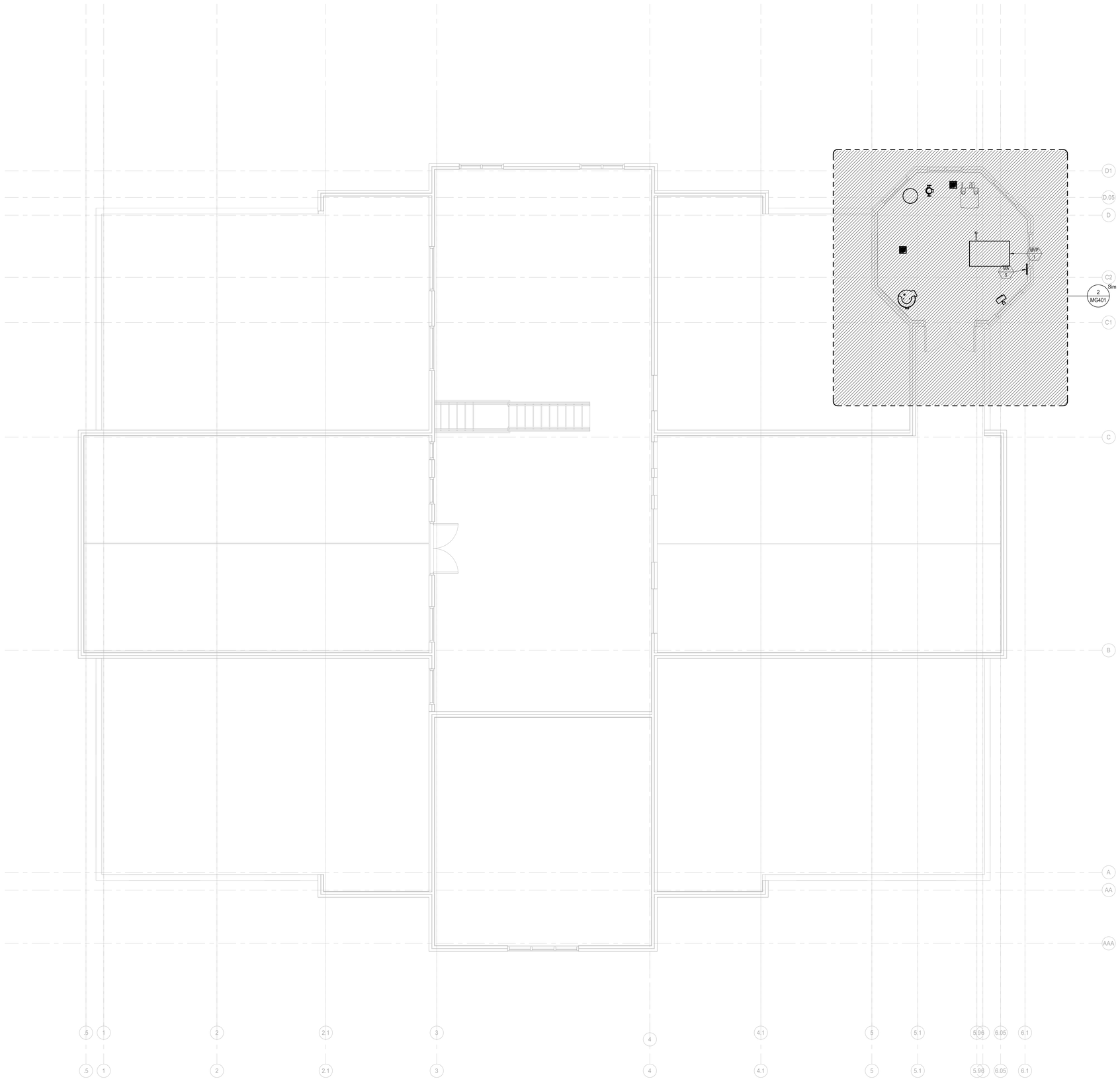

1 MEDICAL GAS PLAN LEVEL 3
SCALE: 1/4" = 1'-0"

FFKR ARCHITECTS
730 Pacific Avenue - Salt Lake City, Utah 84104
O 801.521.6186 - FFKR.COM

VBFA
Murray - Logan - St. George - Tempe
181 East 5600 South
Murray, UT 84107
VBFA Project Number: 20405
801.530.3148 T
801.530.3150 F

Utah Fertility Center Outpatient Surgery Facility
1365 W Pleasant Grove Blvd, Pleasant Grove, UT 84062
UTAH FERTILITY CENTER
CONSTRUCTION DOCUMENTS - 12.MAR.2021

REGISTERED PROFESSIONAL ENGINEER
No. 11599476-2202
DALLEN BLAIR ROMRIELL
03.12.2021
STATE OF UTAH

DATE	REVISION

PROJECT NUMBER 20087

MEDICAL GAS PLAN LEVEL 3

MG103

3/12/2021 1:37:26 PM

REFERENCE NOTES

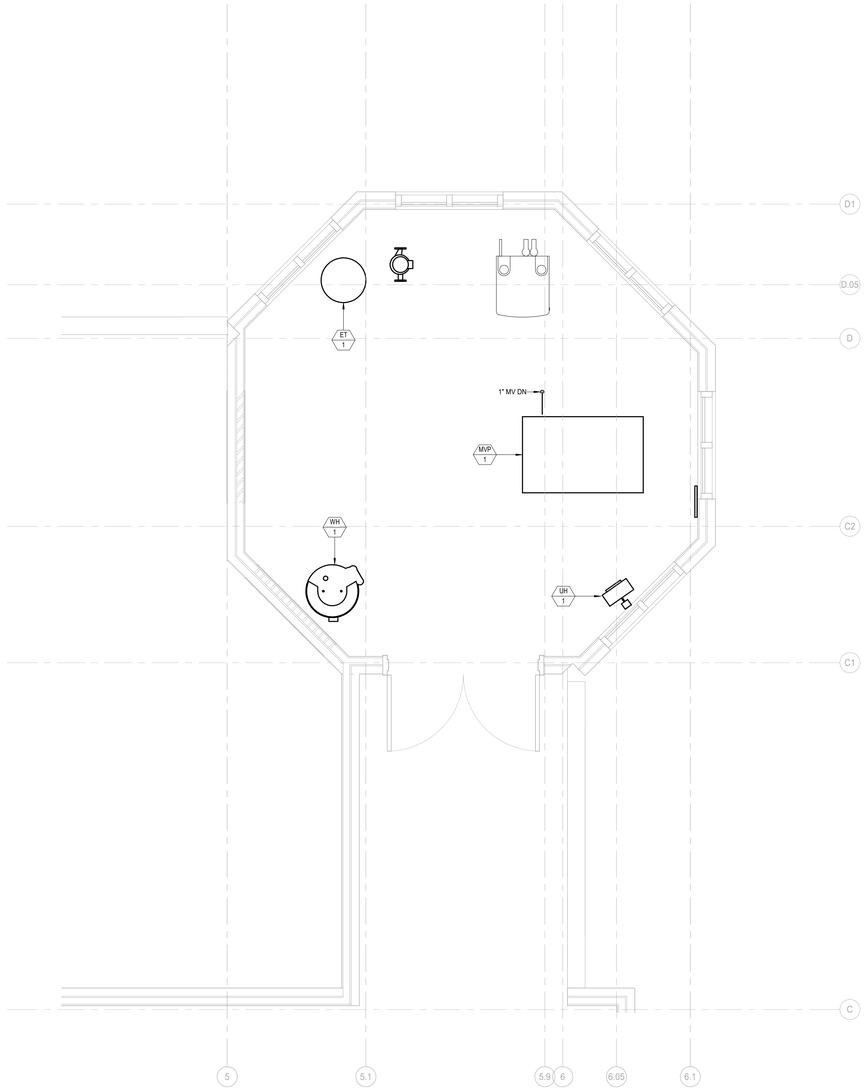

2 ENLARGED MED GAS PLAN LEVEL 3
SCALE: 1/2" = 1'-0"

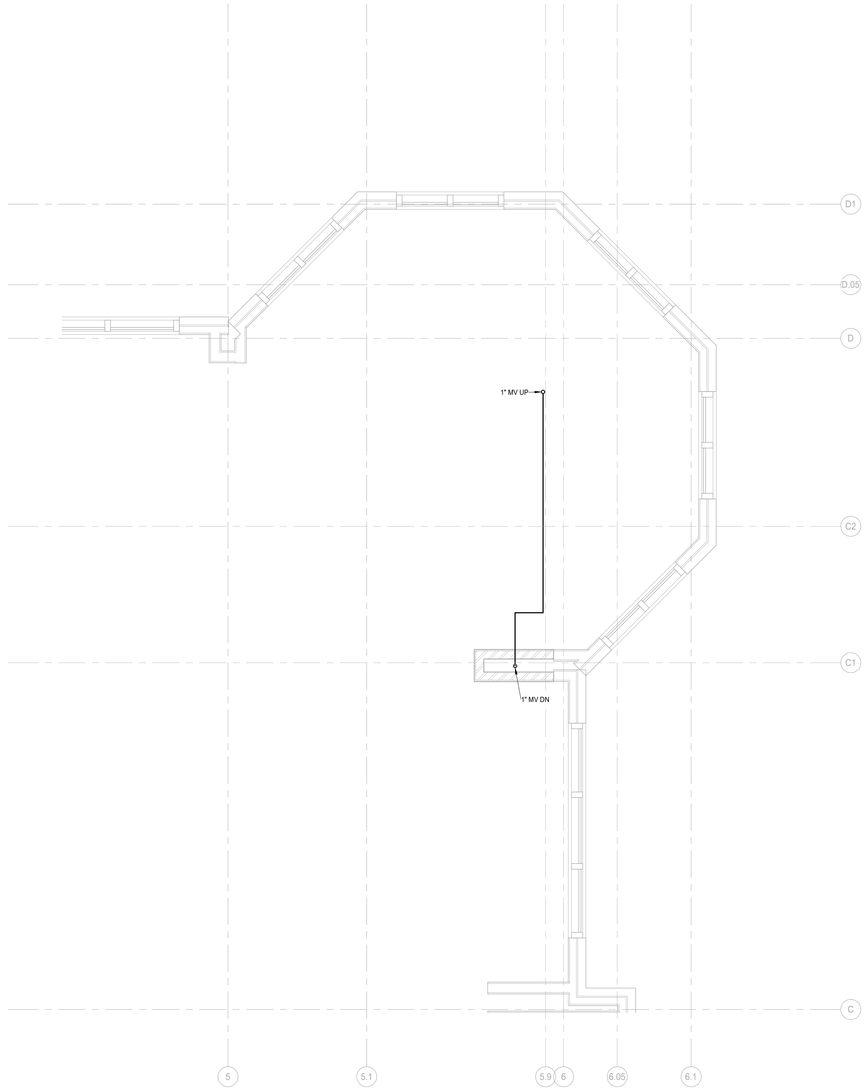

1 ENLARGED MED GAS PLAN LEVEL 2
SCALE: 1/2" = 1'-0"

FFKR ARCHITECTS
730 Pacific Avenue - Salt Lake City, Utah 84104
O 801.521.6186 - FFKR.COM

VBFA
WWW.VBFA.COM
Murray - Logan - St. George - Tempe
181 East 5600 South
Murray, UT 84107
VBFA Project Number: 20405
801.530.3148 T
801.530.3150 F

Utah Fertility Center Outpatient Surgery Facility
1365 W Pleasant Grove Blvd, Pleasant Grove, UT 84062
UTAH FERTILITY CENTER
CONSTRUCTION DOCUMENTS - 12.MAR.2021

REGISTERED PROFESSIONAL ENGINEER
No. 11599476-2202
DALLEN BLAIR ROMRIELL
03.12.2021
STATE OF UTAH

△	DATE	REVISION

PROJECT NUMBER 20087

ENLARGED MEDICAL GAS PLANS

MG401

3/12/2021 1:37:26 PM

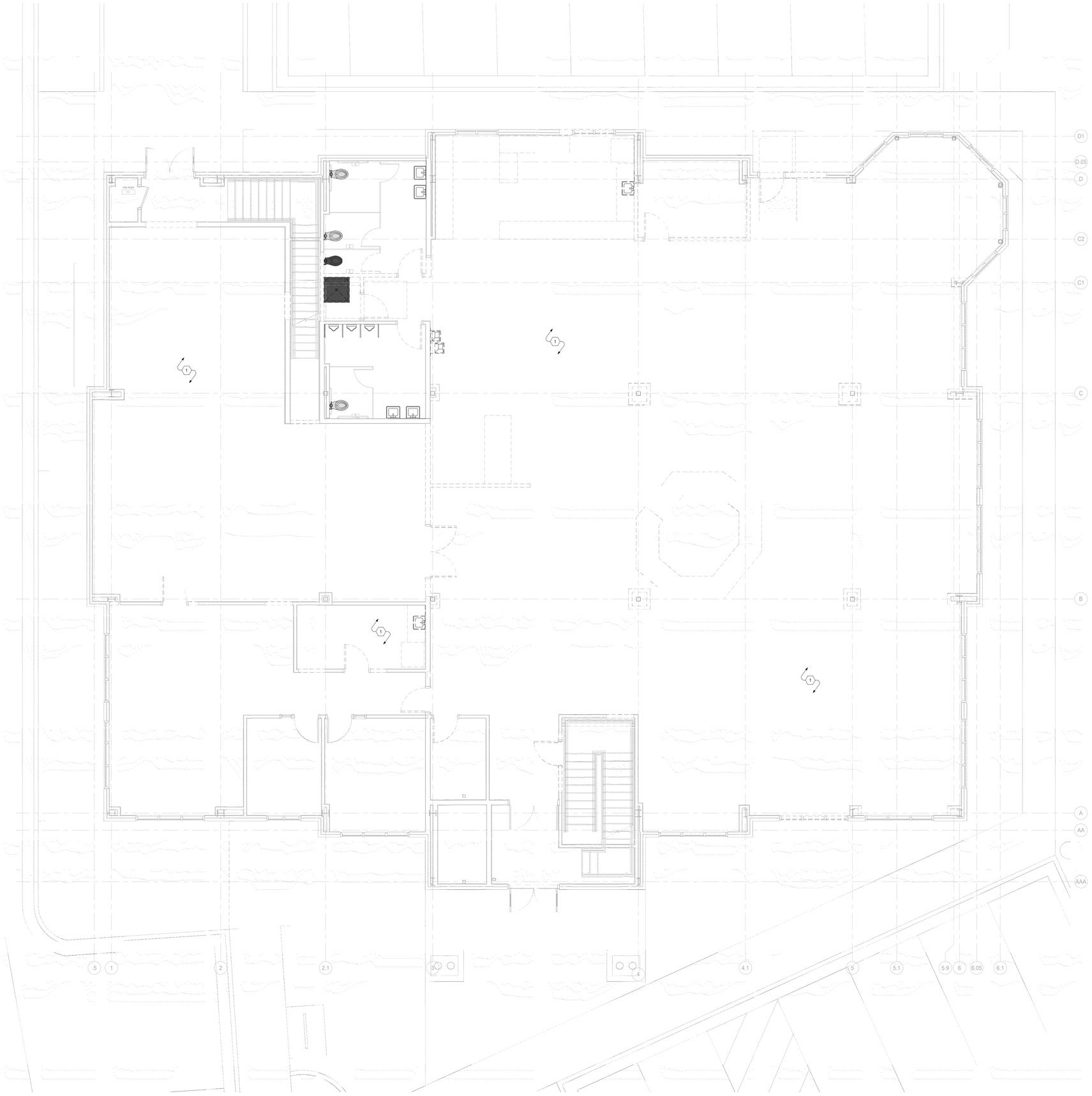

1 FIRE PROTECTION DEMO PLAN LEVEL 1
SCALE: 1/4" = 1'-0"

REFERENCE NOTES

1. FIRE SPRINKLERS AND PIPING TO BE REMOVED UP TO VALVE AND REPLACED WITH NEW SPRINKLER SYSTEM TO ACCOMODATE REMODELED SPACES, INCLUDING NEW FLOOR PLAN, CEILING PLAN AND CEILING HEIGHT ADJUSTMENTS, TYPICAL. REFER TO THE ARCHITECTURAL SHEETS FOR COMPLETE SCOPE OF THE PROJECT.

FFKR ARCHITECTS
730 Pacific Avenue - Salt Lake City, Utah 84104
O 801.521.6186 - FFKR.COM

VBFA WWW.VBFA.COM
Murray - Logan - St. George - Tempe
181 East 5600 South 801.530.3148 T
Murray, UT 84107 801.530.3150 F
VBFA Project Number: 20405

Utah Fertility Center Outpatient Surgery Facility
1365 W Pleasant Grove Blvd, Pleasant Grove, UT 84062
UTAH FERTILITY CENTER
CONSTRUCTION DOCUMENTS - 12.MAR.2021

REGISTERED PROFESSIONAL ENGINEER
No. 11599476-2202
DALLEN BLAIR ROMRIELL
03.12.2021
STATE OF UTAH

△	DATE	REVISION

PROJECT NUMBER 20087

FIRE PROTECTION DEMO PLAN LEVEL 1

FPD101

3/12/2021 1:37:12 PM

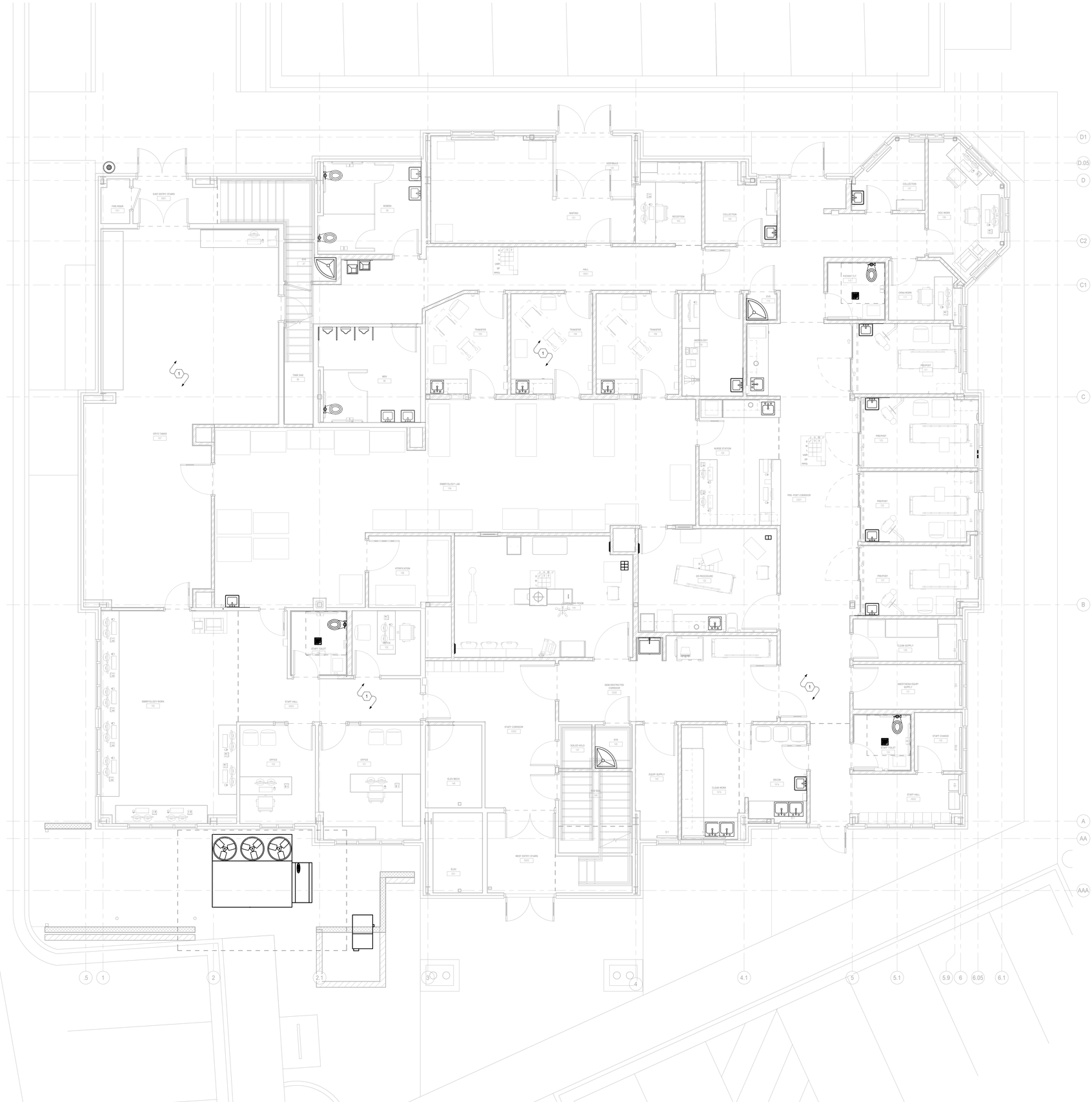

1 FIRE PROTECTION PLAN LEVEL 1
SCALE: 1/4" = 1'-0"

REFERENCE NOTES

1. INSTALL NEW SPRINKLER AND PIPING THROUGHOUT THE LEVEL. ALL SPRINKLERS SHALL BE QUICK RESPONSE TYPE SPRINKLERS. FIRE SPRINKLERS AND PIPING SHALL BE INSTALLED TO MEET NFPA 13-2016 REQUIREMENTS, TYPICAL.

FFKR ARCHITECTS
730 Pacific Avenue - Salt Lake City, Utah 84104
O 801.521.6186 - FFKR.COM

VBFA WWW.VBFA.COM
Murray - Logan - St. George - Tempe
181 East 5600 South 801.530.3148 T
Murray, UT 84107 801.530.3150 F
VBFA Project Number: 20465

Utah Fertility Center Outpatient Surgery Facility
1365 W Pleasant Grove Blvd, Pleasant Grove, UT 84062
UTAH FERTILITY CENTER
CONSTRUCTION DOCUMENTS - 12.MAR.2021

REGISTERED PROFESSIONAL ENGINEER
No. 11599476-2202
DALLEN BLAIR ROMRIELL
03.12.2021
STATE OF UTAH

△	DATE	REVISION

PROJECT NUMBER 20087

FIRE PROTECTION PLAN LEVEL 1

FP101

3/12/2021 1:37:06 PM

REFERENCE NOTES

1. REMOVE AND/OR NEW INSTALL SPRINKLERS AND PIPING AS NECESSARY FOR THE MECHANICAL ENCLOSURE TO ACCOMDATE OTHER DISIPLINES AND CHANGES TO THE AREA.

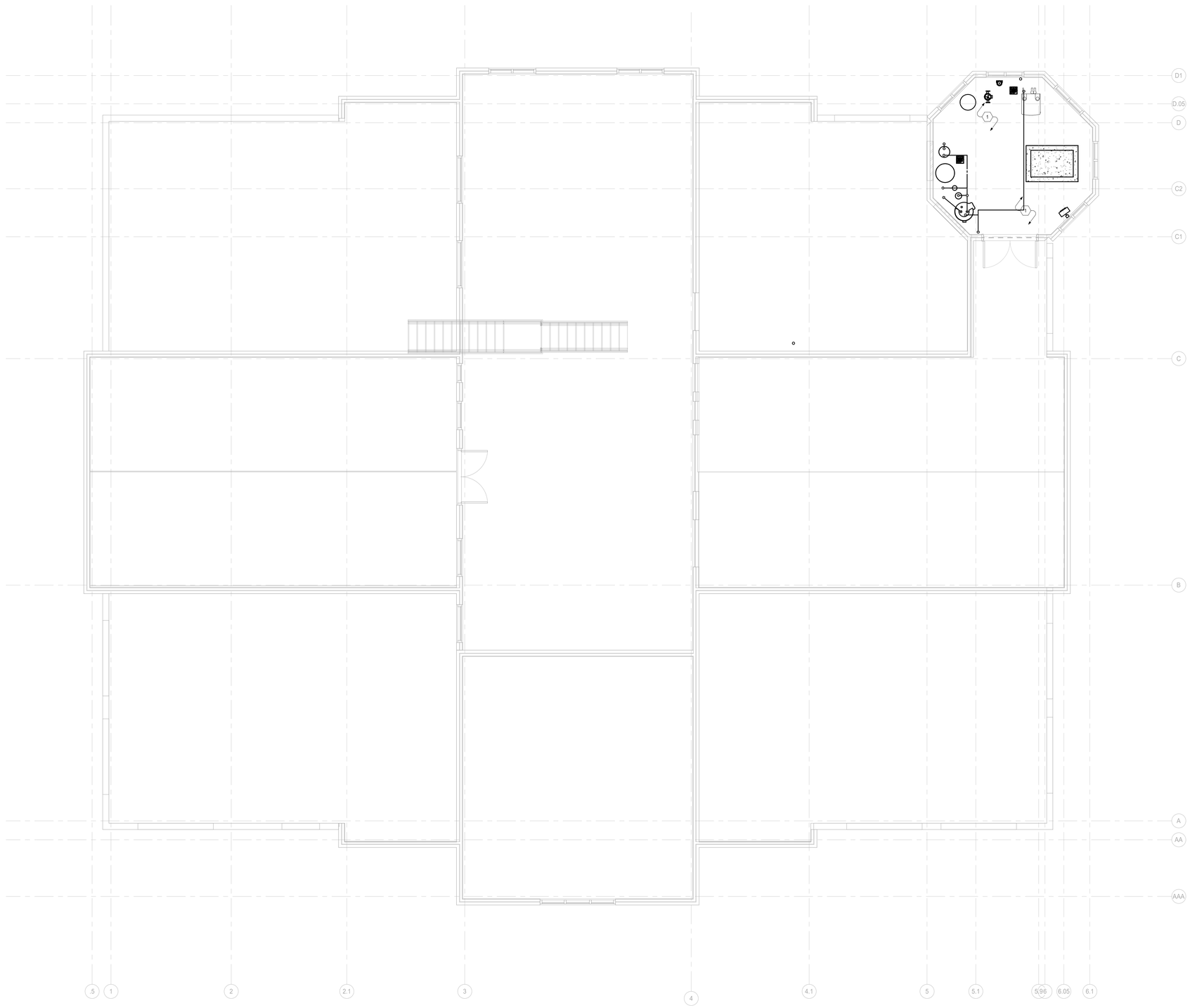

1 FIRE PROTECTION PLAN LEVEL 3
SCALE: 1/4" = 1'-0"

FFKR ARCHITECTS
730 Pacific Avenue - Salt Lake City, Utah 84104
O 801.521.6186 - FFKR.COM

VBFA
WWW.VBFA.COM
Murray - Logan - St. George - Tempe
181 East 5600 South
Murray, UT 84107
VBFA Project Number: 20405
801.530.3148 T
801.530.3150 F

Utah Fertility Center Outpatient Surgery Facility
1365 W Pleasant Grove Blvd, Pleasant Grove, UT 84062
UTAH FERTILITY CENTER
CONSTRUCTION DOCUMENTS - 12.MAR.2021

REGISTERED PROFESSIONAL ENGINEER
No. 11599476-2202
DALLEN BLAIR ROMRIELL
03.12.2021
STATE OF UTAH

△	DATE	REVISION

PROJECT NUMBER 20087

FIRE PROTECTION PLAN LEVEL 3

FP103

3/12/2021 1:37:06 PM

ELECTRICAL SYMBOL SCHEDULE

SYMBOL	DEVICE/FIXTURE DESCRIPTION	MOUNTING	COMMENTS
	MECHANICAL/PLUMBING EQUIPMENT CALLOUT		
	KITCHEN EQUIP. CALLOUT		
	KITCHEN EQUIP. CALLOUT, OR AS NOTED BY ARCH.		
	LUMINAIRE TYPE		
	DIAGRAM/DETAIL CALLOUT		
	CONDUIT RUN CONCEALED IN WALL OR CEILING		
UG	CONDUIT RUN CONCEALED IN FLOOR OR GROUND		
	SURFACE RACEWAY/WIREMOLD		
	LOW VOLTAGE CONDUIT RUN		
	DEMOLITION		
	EXISTING		
	HOME RUN TO PANEL		
	CONDUIT STUB		
	CONDUIT BREAK/CONTINUATION		
	CONDUIT STUB DOWN		
	CONDUIT STUB UP		
	FUSE		
	GROUND/GROUND ROD		
	CIRCUIT BREAKER		

ABBREVIATIONS

A	AMPS	ENT	ELEC. NON-METAL. TUBING	NL	NIGHT LIGHT, BYPASS LOCAL SWITCHING
AFC	AVAILABLE FAULT CURRENT	ER	EXISTING TO BE RELOCATED	PC	PLUMBING CONTRACTOR
AFF	ABOVE FINISHED FLOOR	EX	EXISTING TO REMAIN	POC	POINT OF CONNECTION
AFG	ABOVE FINISHED GRADE	FMC	FLEXIBLE METAL CONDUIT	POS	POINT OF SALE
AIC	AMPS INTERR. CAPACITY	GC	GENERAL CONTRACTOR	R	RECEIVER
AWG	AMERICAN WIRE GAUGE	GEC	GRND. ELEC. COND. AT SES	RM	ROOF MOUNTED
BC	BARE COPPER	GFCI	GRND. FLT. CURR. INTERR.	RMC	RIGID METALLIC CONDUIT
BFC	BELOW FINISHED CEILING	GND	GROUND	RNC	RIGID NON-METALLIC COND.
BFG	BELOW FINISHED GRADE	IMC	INTER. METAL CONDUIT	SBJ	SYSTEM BONDING JUMPER
C	CONDUIT	IG	ISOLATED GROUND	SCA	SHORT CIRCUIT AMPERES
CND	CONDUIT	KCMIL	1000 CIRCULAR MILS (MCM)	T	TRANSMITTER
CO	CONDUIT ONLY	LFMC	LIQUID-TIGHT FLEX. METAL. COND.	TC	TEMP. CONTROL CONTR.
CT	CURRENT TRANSDUCER	LFNC	LIQUID-TIGHT FLEX. NON-METAL. COND.	UG	UNDERGROUND
CU	COPPER MATERIAL	MC	MECHANICAL CONTRACTOR	UNO	UNLESS NOTED OTHERWISE
DED	DEDICATED	MCA	MINIMUM CIRCUIT AMPS	VA	VOLT/AMPS
DFA	DROP FROM ABOVE	N1	NEMA 1	VIF	VERIFY IN FIELD
EC	ELECTRICAL CONTRACTOR	N3R	NEMA 3R	WP	WEATHERPROOF/ NEMA 3R
EF	EXHAUST FAN	N	NEW	XP	EXPLOSION PROOF
EM	EMER./EGRESS BATTERY			XR	EXISTING TO BE REMOVED
EMT	ELEC. METALLIC TUBING				

NOTES

(1) SEE LUMINAIRE SCHEDULE FOR FIXTURE TYPES AND DETAILS.
(2) SEE LUMINAIRE SCHEDULE FOR MOUNTING REQUIREMENTS.
(3) WIRE LIGHT FIXTURE FROM ADJACENT J-BOX.
(4) CONNECT NEAREST UN-SWITCHED HOT CONDUCTOR TO EMERGENCY BALLAST
(5) DIRECTIONAL ARROWS INDICATE REQUIRED CHEVRONS.
(6) COORDINATE MOUNTING HEIGHT WITH ARCHITECTURAL INTERIOR ELEVATIONS
(7) USE WITH POWER PACK.
(8) "X" IN SYMBOL IS INCHES BETWEEN RECEPTACLE ALONG WIREWAY. SEE DRAWINGS.
(9) PROVIDE UL LISTED DEVICE COMPATIBLE WITH THE FIRE ALARM PANEL/SYSTEM.
(10) MATCH THE VOLTAGE OF THE RELAY WITH THAT OF THE CONTROLLING CIRCUIT.
(11) USE A 4" X 4" BOX WITH A MUD RING TO MATCH THE DEVICE AND INSTALLATION.
(12) PROVIDE MUD RING AND/OR BOX COVER APPROPRIATE FOR DEVICE/FIXTURE SERVED.
(13) USE HEAVY DUTY DEVICE FOR 480 VOLT.
(14) SIZE TO THE EQUIPMENT BEING CONTROLLED
(15) FIRE ALARM PANELS: FACP: FIRE ALARM CONTROL PANEL, NAC: NOTIFICATION APPLIANCE CIRCUIT PANEL, ANNUN: GRAPHIC ANNUNCIATOR PANEL, AND SES: SMOKE EVACUATION SYSTEM PANEL.
(16) LIGHT FIXTURES ARE SCALED WITHIN THE DRAWINGS BASED ON ACTUAL DIMENSIONS.

ELECTRICAL SYMBOL SCHEDULE

SYMBOL	DEVICE/FIXTURE DESCRIPTION	MOUNTING	COMMENTS
▽	TELEPHONE OUTLET, SINGLE PORT	18"	
▽	TELEPHONE OUTLET, CUSTOM HEIGHT		(6)
▼	DATA OUTLET, DUAL PORT	18"	
▼	DATA OUTLET, CUSTOM HEIGHT		(6)
▼	DUAL DATA AND SINGLE TELEPHONE PORT	18"	
▼	DUAL DATA AND SINGLE TELEPHONE PORT, CUSTOM HEIGHT		(6)
▼#	DATA OUTLET, ATTRIBUTE SIGNIFIES PORT QUANTITY	18"	
▽	TELEPHONE OUTLET, SINGLE PORT, FLOOR MOUNTED	FLOOR	
▼	DATA OUTLET, DUAL PORT, FLOOR MOUNTED	FLOOR	
	TELEVISION OUTLET	AS NOTED	(6) (11)
	NURSE CALL STATION, SINGLE BED	4'-11"	(11)
	NURSE CALL STATION, DOUBLE BED	4'-11"	(11)
	NURSE CALL STATION, EMERGENCY	4'-11"	(11)
	NURSE CALL STATION, CODE BLUE	4'-11"	(11)
	NURSE CALL STATION, MICROPHONE/SPEAKER UNIT	4'-11"	(11)
	NURSE CALL PULL CHAIN	AS NOTED	
	NURSE CALL DOME LIGHT	CEILING	(11)
	NURSE CALL DOME LIGHT, WALL	WALL	(11)
NC	NURSE CALL: MASTER STATION	4'-11"	(11)
	SECURITY CAMERA, FIXED	CEILING	
	SECURITY CAMERA, PTZ	CEILING	
	SECURITY CAMERA, FIXED, WALL	AS NOTED	(11)
	SECURITY CAMERA, PTZ, WALL	AS NOTED	(11)
CR	CARD READER	4'-0"	(11)
	SECURITY PANEL, SURFACE	AS NOTED	
	SECURITY PANEL, RECESSED	AS NOTED	
F	FIRE ALARM MANUAL PULL STATION	4'-0"	(9) (11)
F#	FIRE ALARM STROBE, ATTRIBUTE SIGNIFIES CANDELA RATING	7'-6"	(9) (11)
F	FIRE ALARM HORN	7'-6"	(9) (11)
F#	FIRE ALARM HORN STROBE, ATTRIBUTE SIGNIFIES CANDELA RATING	7'-6"	(9) (11)
F#	FIRE ALARM HORN STROBE, CEILING MOUNT, ATTRIBUTE SIGNIFIES CANDELA RATING	CEILING	(9) (11)
F	FIRE ALARM SPEAKER	7'-6"	(9) (11) (18)
F#	FIRE ALARM SPEAKER STROBE, ATTRIBUTE SIGNIFIES CANDELA RATING	7'-6"	(9) (11) (18)
	FIRE ALARM PANEL, SURFACE	AS NOTED	(15)
	FIRE ALARM PANEL, RECESSED	AS NOTED	(15)

ELECTRICAL SYMBOL SCHEDULE

SYMBOL	DEVICE/FIXTURE DESCRIPTION	MOUNTING	COMMENTS
	LINEAR LIGHT FIXTURE	CEILING	(1) (2) (3) (16)
	LINEAR EMERGENCY LIGHT FIXTURE	CEILING	(1) (2) (3) (16)
	LINEAR CRITICAL LIFE LIGHT FIXTURE	CEILING	(1) (2) (3) (4) (16)
	LINEAR LIFE SAFETY LIGHT FIXTURE	CEILING	(1) (2) (3) (4) (16)
	RECESSED LIGHT FIXTURE	CEILING	(1) (3)
	RECESSED EMERGENCY LIGHT FIXTURE	CEILING	(1) (3)
	RECESSED WALL WASH LIGHT FIXTURE	CEILING	(1) (3)
	CEILING LIGHT FIXTURE	CEILING	(1) (2)
	PENDENT LIGHT EMERGENCY	CEILING	(1) (2)
	PENDENT/CHANDELIER LIGHT FIXTURE	SUSPEND	(1) (2) (3)
	EXIT SIGN, WALL	7'-6"	(1) (2) (4) (5)
	EXIT SIGN	CEILING	(1) (4) (5)
	EMERGENCY LIGHT FIXTURE, WALL	7'-6"	(1) (2)
P	PHOTO-ELECTRIC CELL	AS NOTED	
	DUAL TECHNOLOGY VACANCY SENSOR	CEILING	(7)
	DUAL TECHNOLOGY VAC. SENSOR, WALL	AS NOTED	(7)
	DUAL TECHNOLOGY VAC. SENSOR, WALL WITH DIMMER SWITCH	AS NOTED	(7)
	DUAL TECHNOLOGY VAC. SENSOR SWITCH, 1-BUTTON	4'-0"	(7)
	DUAL TECHNOLOGY VAC. SENSOR SWITCH, 2-BUTTON	4'-0"	(7)
S	SINGLE POLE SWITCH	4'-0"	
S	DIMMER SWITCH	4'-0"	
S	LOW VOLTAGE SWITCH	4'-0"	
S	LOW VOLTAGE DIMMER SWITCH	4'-0"	
	LIGHTING CONTROL PANEL, SURFACE	6'-6" TO TOP	
	LIGHTING CONTROL PANEL, RECESSED	6'-6" TO TOP	
(S)(D)(Q)	(S) SIMPLEX (D) DUPLEX (Q) QUADPLEX OR DOUBLE DUPLEX		
	STANDARD CONVENIENCE OUTLET	18"	
	CONVENIENCE OUTLET, GFCI	18"	
	CONVENIENCE OUTLET, HOSPITAL GRADE	18"	
	STANDARD CONVENIENCE OUTLET, CUSTOM HEIGHT		
	CONVENIENCE OUTLET, GFCI, CUSTOM HEIGHT		
	CONVENIENCE OUTLET, FLOOR	FLOOR	
	CONVENIENCE OUTLET, CEILING	CEILING	
COMM	COMBINATION POWER/COMMUNICATION FLOOR BOX	FLOOR	
J	JUNCTION BOX	AS NOTED	(12)
J	JUNCTION BOX, WALL	AS NOTED	(12)
J	JUNCTION BOX, FLOOR	FLOOR	(12)
S TH	MANUAL SWITCH WITH THERMAL OVERLOAD		
	PUSH BUTTON SWITCH, SINGLE	AS NOTED	
F	FUSED DISCONNECT SWITCH		(13) (14)
	MAIN DISTRIBUTION POWER PANEL		
	PANEL BOARD, SURFACE	6'-6" TO TOP	(15)
	PANEL BOARD, RECESSED	6'-6" TO TOP	(15)

GENERAL NOTES

1. THE ELECTRICAL SYSTEMS DEFINED BY THESE PLANS AND SPECIFICATIONS ARE TO BE CONSTRUCTED AS COMPLETE AND OPERABLE SYSTEMS AND SHALL BE BID WITH THIS INTENT. THE CONTRACTOR SHALL VISIT THE SITE, READ ALL THE RELEVANT DOCUMENTS AND BECOME FAMILIAR WITH THE TYPE OF CONSTRUCTION AND WORK TO BE ACCOMPLISHED. SHOULD ANY ERROR, OMISSION OR CONFLICT EXIST IN EITHER THE PLANS OR SPECIFICATIONS, THE CONTRACTOR SHALL NOTIFY THE ENGINEER IN WRITING BEFORE SUBMITTING HIS BID PRICE SO A CHANGE CAN BE ISSUED IN A PRE-BID ADDENDUM. OTHERWISE, THE CONTRACTOR AND/OR EQUIPMENT SUPPLIER SHALL SUPPLY THE PROPER MATERIALS AND LABOR TO INSTALL COMPLETE AND OPERABLE SYSTEMS AT THEIR OWN EXPENSE. WHEN EACH ELECTRICAL SYSTEM IS COMPLETE, THE CONTRACTOR SHALL TEST AND CONFIRM IT'S PROPER OPERATION. ANY INCOMPLETE SYSTEM SHALL BE MADE COMPLETE AND OPERABLE.
2. THE ARCHITECTURAL AND MECHANICAL PLANS ARE CONSIDERED A PART OF THE ELECTRICAL DOCUMENTS SO FAR AS ANY ELECTRICAL ITEMS THEY MAY CONTAIN. THE ELECTRICAL CONTRACTOR SHALL REFER TO AND COORDINATE WITH THEM. NO EXTRA COST SHALL BE ALLOWED FOR FAILURE TO COORDINATE THE CONTRACT DOCUMENTS WITH OTHER TRADES AND/OR IF EQUIPMENT DIMENSIONS ARE GREATER THAN SPECIFIED AND/OR DIMENSIONED ON THE PLANS.
3. NO ADDITIONS TO THE CONTRACTOR BID WILL BE ALLOWED FOR CHANGES MADE NECESSARY BY INTERFERENCE WITH OTHER WORK.
4. THE ELECTRICAL CONTRACTOR SHALL PROVIDE EQUIPMENT, MATERIALS AND LABOR FOR THE CONNECTIONS OF ALL EQUIPMENT SHOWN ON THE PLANS - ARCHITECTURAL, MECHANICAL, ETC.
5. THIS PROJECT IS TO BE INSTALLED IN STRICT ACCORDANCE WITH LOCAL AND STATE CODES AND THE NEC, IF AT ANY TIME DURING CONSTRUCTION, OR AFTER, SOMETHING IS FOUND TO BE INSTALLED IN VIOLATION OF THE CODES LISTED ABOVE, IT SHALL BE CORRECTED AT THE CONTRACTORS EXPENSE.
6. ALL EQUIPMENT PROVIDED BY THE ELECTRICAL CONTRACTOR SHALL BE LISTED AND LABELED BY A NATIONALLY RECOGNIZED TESTING AGENCY, ACCEPTABLE TO THE AUTHORITY HAVING JURISDICTION, AND BE PROPERLY INSTALLED FOR THE CONDITIONS AND SPACE THAT EQUIPMENT IS BEING INSTALLED WITHIN.
7. THE ELECTRICAL CONTRACTOR SHALL COORDINATE AND CONFIRM THE EXACT LOCATION OF THE POWER PANELS FROM WHICH NEW CIRCUITS ARE BEING FED FROM. VERIFY EXISTING BRANCH CIRCUIT BREAKERS AND PROVIDE NEW BREAKERS AS NECESSARY FOR A COMPLETE AND OPERABLE SYSTEM.
8. THE ELECTRICAL CONTRACTOR SHALL COORDINATE AND CONFIRM THE EXACT LOCATION OF THE TELE/DATA ROOM FROM WHICH NEW TELE/DATA OUTLETS WILL BE FED FROM. VERIFY EXISTING PATCH PANEL SPACES AND PROVIDE NEW PATCH PANELS AS NECESSARY TO LAND ALL NEW TELE/DATA CABLING.
9. THE ELECTRICAL CONTRACTOR SHALL INSTALL A SEPARATE EQUIPMENT GROUNDING CONDUCTOR IN EACH CONDUIT RUN. CONDUIT SHALL NOT BE USED AS AN EQUIPMENT GROUNDING CONDUCTOR. THE ELECTRICAL CONTRACTOR SHALL GROUND THE ELECTRICAL SYSTEM IN ACCORDANCE WITH LOCAL AND NATIONAL CODES.
10. THE ELECTRICAL CONTRACTOR SHALL CONFIRM MINIMUM CODE (NEC) WORKING CLEARANCE BEFORE INSTALLING ANY ELECTRICAL PANELS OR CABINETS AND SHALL MOVE THE PANELS AT HIS EXPENSE IF REJECTED BY AN INSPECTOR. IF CLEARANCE IS NOT POSSIBLE, THE DESIGNER SHALL BE NOTIFIED IMMEDIATELY IN WRITING.
11. CONDUIT LAYOUTS SHOWN ON THE PLANS ARE DIAGRAMATIC, NOT INDICATING THE ROUTING REQUIRED. THE EC SHALL ROUTE THE CONDUITS AS REQUIRED BY THE CONDITIONS OF THE INSTALLATION AND SHALL COORDINATE WITH DUCTWORK, PIPING, EQUIPMENT, BUILDING STRUCTURE AND OTHER POTENTIAL OBSTRUCTIONS.
12. THE CONTRACTOR SHALL ALLOW THE MOVEMENT, BEFORE ROUGH-IN, OF ANY ELECTRICAL PANEL, DEVICE, LUMINAIRE, ETC. A DISTANCE OF 10 FEET WITHOUT REQUIRING ADDITIONAL COST TO THE PROJECT.
13. THE ELECTRICAL CONTRACTOR SHALL SECURE ALL CONDUIT TO THE STRUCTURE AS IT IS SET IN PLACE USING INDUSTRY STANDARD METHODS AND PRACTICES.
14. MINIMUM SIZE CONDUIT SHALL BE 3/4". ABOVE GROUND CONDUIT SHALL BE EMT WITH STEEL SET SCREW FITTINGS. UNDERGROUND CONDUIT SHALL BE PVC (SCH40) WITH GRC ELBOWS AND RISERS WRAPPED IN CORROSION RESISTANT MATERIALS WHERE IN DIRECT CONTACT WITH THE SOIL.
15. FLEXIBLE CONDUIT SHALL BE LIMITED TO CONNECTIONS TO LIGHT FIXTURES AND FINAL CONNECTIONS TO MOTORS OR OTHER EQUIPMENT SUBJECT TO VIBRATION. LENGTHS OF FLEXIBLE OR SEALTITE CONDUIT SHALL NOT BE GREATER THAN 72" INCHES.
16. WIRING DEVICES SHALL MATCH EXISTING COLOR AND FACEPLATE TYPE.
17. TO ASSURE ALL DEVICES ARE RIGIDLY SET, THE ELECTRICAL CONTRACTOR SHALL SECURE ALL DEVICE BOXES WITH BRACKETS, HANGERS, ETC. DESIGNED FOR THE APPLICATION. ANY DEVICE BOXES NOT SECURED WILL BE MADE SECURE AT THE CONTRACTORS EXPENSE.
18. THE ELECTRICAL CONTRACTOR SHALL PROVIDE ALL EMPTY CONDUITS WITH 200LB RATED NYLON PULL CORD.
19. BEFORE ANY ELECTRICAL CONDUIT, BOXES, ETC. ARE COVERED (FLOOR, CEILINGS, WALLS, ETC.), THEY SHALL BE APPROVED BY THE INSPECTING OFFICER (INSPECTOR). THE UNCOVERING AND REPLACEMENT OF ELECTRICAL WORK FOR THE INSPECTION PURPOSES WILL BE AT THE COST OF THE ELECTRICAL CONTRACTOR.
20. ALL BATTERY POWERED OR CONTINUOUS BURN LUMINAIRES SHOWN ON THE PLANS, SUCH AS EXIT LIGHTS, NIGHT LIGHTS, OR EMERGENCY LIGHTS, SHALL BE CONNECTED TO THE UN-SWITCHED LEG OF THE LIGHTING CIRCUIT FEEDING THAT AREA.
21. LUMINAIRES INSTALLED IN THE MECHANICAL ROOM SHALL BE PLACED SO THAT ALL EQUIPMENT IS ADEQUATELY ILLUMINATED AFTER THE MECHANICAL EQUIPMENT IS IN PLACE.
22. ALL LUMINAIRES SHALL BE SUPPORTED FROM THE BUILDING STRUCTURE AND NOT SOLELY FROM THE CEILING GRID OR OTHER NONSTRUCTURAL MEMBER.
23. TO MAINTAIN CONSISTENT LIGHT QUALITY, FOR ANY ONE LAMP TYPE SUPPLIED, LAMPS SHALL BE OF THE SAME MANUFACTURE, SURFACE TEMPERATURE, COLOR RENDERING INDEX, LAMP EFFICACY, LUMEN OUTPUT AND STARTING CHARACTERISTICS FOR ALL INSTALLED.
24. WHERE WIRE SIZE IS NOT SHOWN ON THE DRAWINGS FOR 20A, 120/277VAC BRANCH CIRCUITS, THE CIRCUIT SHALL CONSIST OF 2#12(CU,THHN)+1#12(CU,THHN)GND IN 3/4" EMT CONDUIT. THIS WIRE SIZE SHALL BE INCREASED TO #10(CU,THHN) FOR 120VAC BRANCH CIRCUITS WITH OVERALL LENGTHS EXCEEDING 125' TO ACCOMMODATE FOR VOLTAGE DROP. REFER TO EQUIPMENT SCHEDULES, FEEDER SCHEDULES AND NOTES ON DRAWINGS FOR ALL OTHER BRANCH CIRCUIT AND FEEDER WIRE/CONDUIT SIZING.
25. CONDUCTORS SHALL BE COPPER, 600VAC RATED, TYPE THHN/THWN-2 UNLESS OTHERWISE NOTED. CONDUCTORS SIZES UP TO #10AWG SHALL BE SOLID AND #8AWG AND LARGER SHALL BE STRANDED.
26. ALL TELECOMMUNICATIONS WIRING SHALL BE INSTALLED WITHIN CONDUIT UNLESS INSTALLED ABOVE ACCESSIBLE CEILINGS. MINIMUM CONDUIT SIZE FOR TELECOMMUNICATIONS CABLING SHALL BE 1-1/4" EMT, UNLESS OTHERWISE NOTED.
27. ELECTRICAL CONTRACTOR SHALL COORDINATE WITH EQUIPMENT SUPPLIERS ON THE EXACT LOCATIONS OF ALL EQUIPMENT AND ELECTRICAL CONNECTIONS PRIOR TO ROUGH-IN. THE ELECTRICAL CONTRACTOR SHALL MAKE THE FINAL CONNECTION TO ALL EQUIPMENT UNLESS OTHERWISE DIRECTED BY THE EQUIPMENT SUPPLIER.
28. THE ELECTRICAL CONTRACTOR SHALL CLEAN THE ENTIRE ELECTRICAL SYSTEM AFTER COMPLETION OF THE INSTALLATION. REMOVE ALL FINGER PRINTS, FOREIGN MATTER, PAINT, DIRT, GREASE, UN-NEEDED LABELS OR STICKERS FROM FIXTURES AND EQUIPMENT. REMOVE ALL RUBBISH AND DEBRIS ACCUMULATED DURING INSTALLATION FROM THE PREMISIS.
29. OBTAIN FROM SUPPLIERS ALL WIRING DIAGRAMS FOR EQUIPMENT PRIOR TO ANY ROUGH-IN. TO ASSURE THAT PROPER CHARACTERISTICS ARE PROVIDED, ANY INCORRECT WIRING OR DEVICES INSTALLED BY THE ELECTRICAL CONTRACTOR WITHOUT THE WIRING DIAGRAM SHALL BE CORRECTED AT THE CONTRACTOR'S EXPENSE. PROVIDE COPIES OF WIRING DIAGRAMS WITHIN EACH PIECE OF EQUIPMENT AND ADDITIONAL COPIES WITH THE OPERATION AND MAINTENANCE MANUALS.
30. THE ELECTRICAL CONTRACTOR SHALL COORDINATE WITH THE MECHANICAL CONTRACTOR TO PROVIDE CONDUIT AND DEVICE MOUNTING BOXES FOR THERMOSTATS AND OTHER MECHANICAL CONTROLS.
31. IT IS THE INTENT OF THE CONSTRUCTION DOCUMENTS FOR ALL DEVICES TO BE FLUSH MOUNTED AND CONDUIT/CABLING INSTALLED CONCEALED WITHIN WALLS/CEILINGS. IN AREAS WHERE CONDUIT MUST BE INSTALLED EXPOSED IT SHALL BE COORDINATED WITH THE ARCHITECT AND/OR ENGINEER. ALL EFFORTS SHALL BE MADE TO CONCEAL WIRING METHODS.

SHEET INDEX

Sheet Number	Sheet Name
EE001	ELECTRICAL SYMBOLS AND NOTES
EE501	ELECTRICAL DETAILS
EE502	ELECTRICAL DETAILS
EE602	PANEL SCHEDULES AND CALCULATIONS
EE603	ELECTRICAL SCHEDULES
ED101	LEVEL 1 LIGHTING DEMO PLAN
ED102	LEVEL 1 POWER DEMO PLAN
EL101	LIGHTING PLAN
EP101	POWER PLAN
EP102	MECHANICAL POWER PLAN
EP103	ROOF POWER PLAN
EY101	SYSTEMS PLAN

VBFA
181 East 5600 South
Murray, Utah 84107
O: (801) 530-3148
F: (801) 530-3150
www.vbfa.com
vbfa project #: 20405

FFKR ARCHITECTS
730 Pacific Avenue • Salt Lake City, Utah 84104
801.521.6186 • FFKRLAW.com

Utah Fertility Center Outpatient Surgery Facility
1365 W Pleasant Grove Blvd, Pleasant Grove, UT 84062
UTAH FERTILITY CENTER
CONSTRUCTION DOCUMENTS - 12.MAR.2021

REGISTERED PROFESSIONAL ENGINEER
No. 7877350-2202
RYAN C. VAN VOAST
03/12/2021
STATE OF UTAH

△	DATE	REVISION

PROJECT NUMBER 20087

ELECTRICAL SYMBOLS AND NOTES

EE001

3/12/2021 2:01:36 PM

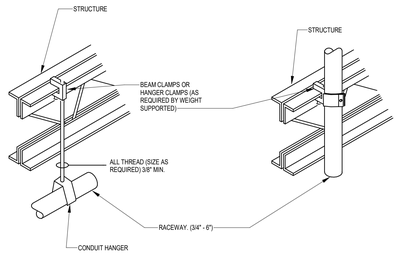

NOTES:
1. WIRE SHALL NOT BE USED AS A COMPONENT OF ANY RACEWAY HANGER SYSTEM.
2. DO NOT NOT SUPPOSE ANY RACEWAY THAN THAN 1" FROM BOTTOM CORD OF STEEL TRUSSES.

8 RACEWAY SUPPORT METHODS DIAGRAM

SCALE: NO SCALE

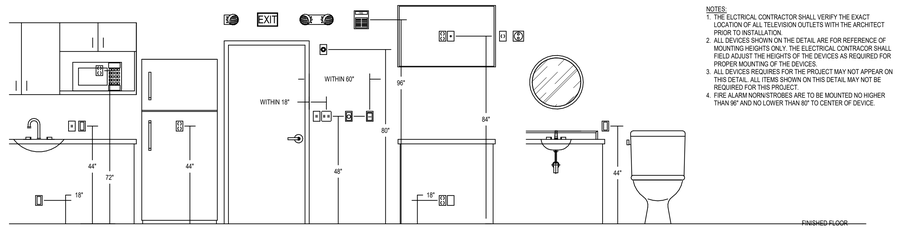

NOTES:
1. THE ELCTRICAL CONTRACTOR SHALL VERIFY THE EXACT LOCATION OF ALL TELEVISION OUTLETS WITH THE ARCHITECT PRIOR TO INSTALLATION.
2. ALL DEVICES SHOWN ON THE DETAIL ARE FOR REFERENCE OF MOUNTING HEIGHTS ONLY. THE ELECTRICAL CONTRACTOR SHALL FIELD ADJUST THE HEIGHTS OF THE DEVICES AS REQUIRED FOR PROPER MOUNTING OF THE DEVICES.
3. ALL DEVICES REQUIRES FOR THE PROJECT MAY NOT APPEAR ON THIS DETAIL. ALL ITEMS SHOWN ON THIS DETAIL MAY NOT BE REQUIRED FOR THIS PROJECT.
4. FIRE ALARM NORN/STROBES ARE TO BE MOUNTED NO HIGHER THAN 96" AND NO LOWER THAN 80" TO CENTER OF DEVICE.

1 MOUNTING HEIGHT DETAIL

SCALE: NO SCALE

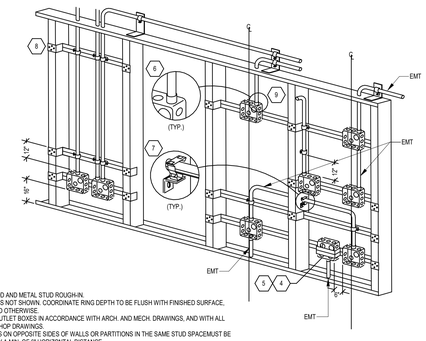

NOTES:
1. TYP. FOR WOOD AND METAL STUD ROUGH-IN.
2. PLASTER RINGS NOT SHOWN. COORDINATE RING DEPTH TO BE FLUSH WITH FINISHED SURFACE, UNLESS NOTED OTHERWISE.
3. LOCATE ALL OUTLET BOXES IN ACCORDANCE WITH ARCH. AND MECH. DRAWINGS, AND WITH ALL APPLICABLE SHOP DRAWINGS.
4. OUTLET BOXES ON OPPOSITE SIDES OF WALLS OR PARTITIONS IN THE SAME STUD SPACEMUST BE SEPARATED BY A MIN. OF 6" HORIZONTAL DISTANCE.
5. ELECTRICAL BOXES INSTALLED IN FIRE RESISTANT WALLS OR PARTITIONS SHALL COMPLY WITH IBC 714.3.2.
6. INSULATED THOAT EMT CONNECTOR.
7. CADDY FASTENER, THROUGH STUD CABLE/CONDUIT SUPPORT "FB12P".
8. ADUSTABLE BAR HANGER.
9. TYPICAL DEVICE JUNCTION BOX.

3 ROUGH-IN DETAIL

SCALE: NO SCALE

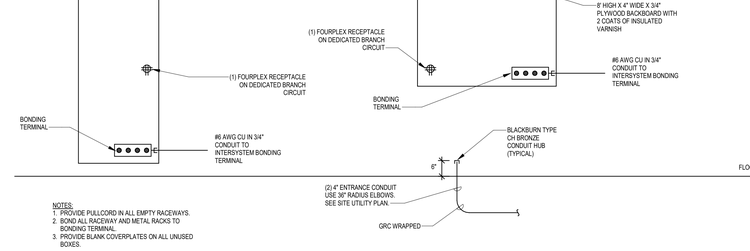

NOTES:
1. PROVIDE PULLCORD IN ALL EMPTY RACEWAYS.
2. BOND ALL RACEWAY AND METAL RACKS TO BONDING TERMINAL.
3. PROVIDE BLANK COVERPLATES ON ALL UNUSED BOXES.

2 TELEPHONE/DATA RACEWAY DIAGRAM

SCALE: NO SCALE

NOTES:
1. PROVIDE QUANTITY OF RELAYS PER SCHEDULE AND QUANTITY OF LOW VOLTAGE SWITCHES PER THE DRAWINGS.
2. PROVIDE ONE TO ONE SWITCHING PER RELAY SCHEDULE.
3. PROVIDE UL LISTED BARRIER OR SEPARATE RELAY CABINET FOR EMERGENCY EGRESS LIGHTING RELAYS.
4. PROVIDE SEPRATE LIGHTING CONTACTORS CONTROLLED BY RELAYS FOR 208V AND 480V EXTERIOR LIGHTING CIRCUITS WHERE 2 POLE RELAYS ARE NOT STANDARD.
5. PROVIDE ALL PROGRAMMING BY FACTORY AUTHORIZED REPRESENTATIVE.
6. SEE RELAY SCHEDULE FOR BRANCH CIRCUIT PANEL AND CIRCUIT NUMBER.
7. VERIFY LOW VOLTAGE SWITCH TYPE WITH MANUFACTURER.
8. VERIFY LOW VOLTAGE CABLE TYPE AND WIRING INSTALLATION METHOD WITH MANUFACTURER.

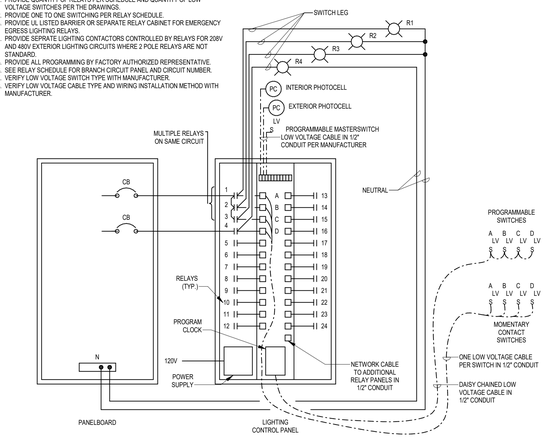

5 PROGRAMMABLE LIGHTING CONTROL DETAIL

SCALE: NO SCALE

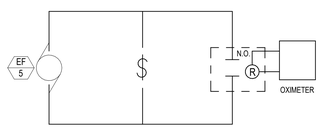

4 EF-5 SWITCHING DIAGRAM

SCALE: NO SCALE

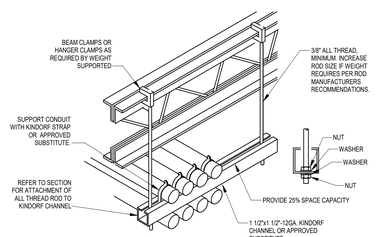

6 TRAPEZE SUPPORT DETAIL

SCALE: NO SCALE

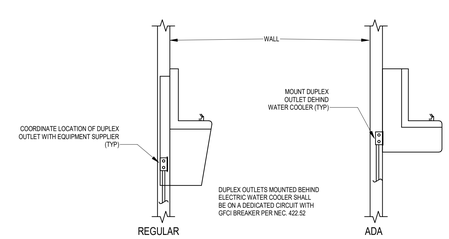

9 ELECTRIC WATER COOLER (EWC) DIAGRAM

SCALE: NO SCALE

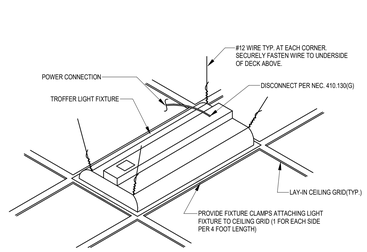

7 RECESSED FIXTURE MOUNTING DIAGRAM

SCALE: NO SCALE

FFKR ARCHITECTS
730 Pacific Avenue • Salt Lake City, Utah 84104
801.521.5186 • FFKR.COM

Utah Fertility Center Outpatient Surgery Facility
1365 W Pleasant Grove Blvd, Pleasant Grove, UT 84062
UTAH FERTILITY CENTER
CONSTRUCTION DOCUMENTS - 12.MAR.2021

△ DATE REVISION

PROJECT NUMBER 20087

ELECTRICAL DETAILS

EE501

VBFA
181 East 5600 South
Murray, Utah 84107
O: (801) 530-3148
F: (801) 530-3150
www.vbfa.com
vbfa project #: 20405

3/12/2021 2:01:36 PM

NOTES:
1. DETAIL IS FOR REFERNCE ONLY. REFER TO MANUFACTURER'S SHOP DRAWINGS FOR WIRING REQUIREMENTS. ALL WIRING SHALL BE INSTALLED IN MINIMUN 3/4" CONDUIT, UNLESS NOTED OTHERWISE.
2. PAINT ALL ACCESSIBLE FIRE ALARM JUNCTION BOXES RED.
3. CIRCUIT BREAKER(S) FEEDING FIRE ALARM PANEL SHALL BE MARKED RED, WITH A NOTE ON PANEL DIRECTORY: "FIRE ALARM SYSTEM - DO NOT TURN OFF"
4. IN EACH SPACE WITH A FIRE ALARM CONTROL PANEL, ANNUCIATOR, OR NAC PANEL, PROVIDE A SMOKE DETECTOR.
5. COORDINATE NAC PANEL LOCATION(S) WITH THE ENGINEER.
6. PROVIDE DUCT SMOKE DETECTOR WITHIN 5' OF THE SMOKE FIRE DAMPER WHERE DETECTOR IS NOT INTEGRAL TO THE DAMPER.
7. PROVIDE MONITOR MODULE AT DUCT SMOKE DETECTORS FURNISHED INTEGRAL TO THE HVAC EQUIPMENT, NOT OF SAME MANUFACTURER AS FIRE ALARM SYSTEM.

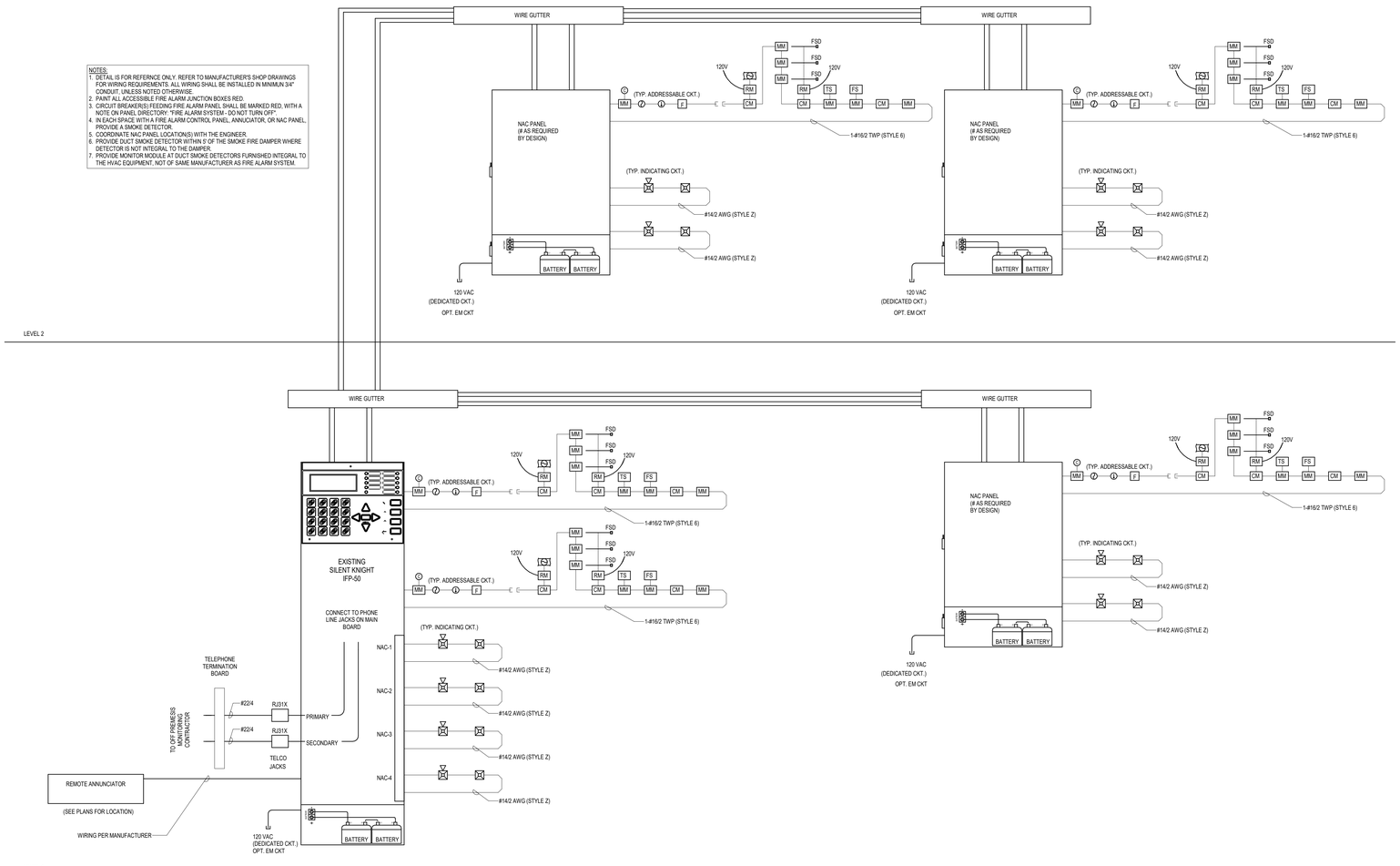

1 FIRE RISER DIAGRAM

SCALE: NO SCALE

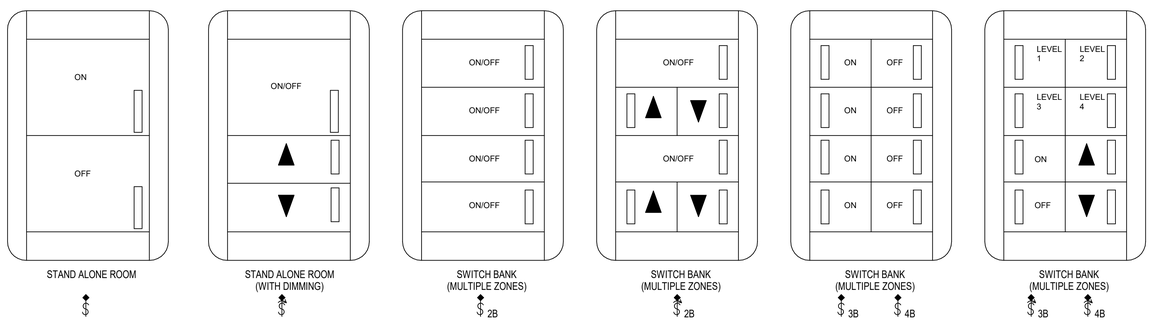

2 LOW VOLTAGE SWITCH DETAIL

SCALE: NO SCALE

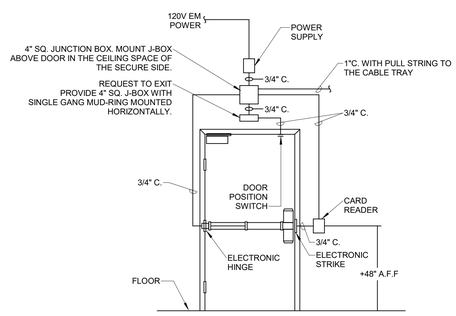

3 ACCESS CONTROL DOOR ROUGH-IN - SINGLE DOOR_CARD READER (TYPICAL)

SCALE: NO SCALE

FFKR ARCHITECTS
730 Pacific Avenue • Salt Lake City, Utah 84104
801.521.6186 • FFKR.COM

Utah Fertility Center Outpatient Surgery Facility
1365 W Pleasant Grove Blvd, Pleasant Grove, UT 84062
UTAH FERTILITY CENTER
CONSTRUCTION DOCUMENTS - 12.MAR.2021

RELEASED FOR CONSTRUCTION
No. 7877350-2202
RYAN C. VAN VOAST
03/12/2021
STATE OF UTAH

△ DATE REVISION

PROJECT NUMBER 20087

ELECTRICAL DETAILS

EE502

VBFA
181 East 5600 South
Murray, Utah 84107
O: (801) 530-3140
F: (801) 530-3150
www.vbfa.com
vbfa project #: 20405

3/12/2021 2:01:36 PM

CONDUCTOR & CONDUIT SCHEDULE - COPPER

TYPE	CONDUCTOR					CONDUIT	KEYED
	AMP	SETS	QTY	SIZE	EQ GND	SIZE	NOTES
30-2	30	1	2	10	10	3/4"	1
125-4	130	1	4	1	6	1-1/2"	1
200-4	200	1	4	#3/O	6	2"	1
400-4	400	2	4	#3/O	3	2-1/2"	1

GENERAL NOTES:

- THHN/THWN/THWN-2 FOR 400 KCMIL AND BELOW, XHHW/XHHW-2 FOR 500 KCMIL AND ABOVE.
- GROUND CONDUCTOR SHALL BE DELETED ON SERVICE ENTRANCE CONDUCTORS.
-

KEYED...

1. REFER TO LATEST ADOPTED VERSION OF THE NEC ARTICLE 310.15 FOR 75°C RATED COPPER AND 110.14(C)(1)(a) FOR 60°C.
2. 200% NEUTRAL (OR 2 NEUTRAL CONDUCTORS).
3. AMPACITY DERATED BY 80% DUE TO (4-6) CURRENT CARRYING CONDUCTORS

SHEET KEYNOTES

E1	DISCONNECT EXISTING PANEL FEEDERS FROM SOURCE AND REFEED FROM NEW PANEL SHOWN ON NEW ONE-LINE DIAGRAM.
E2	REPLACE EXISTING 200A, 3P BREAKER WITH NEW 3P BREAKER SHOWN. BREAKER TO MATCH EXISTING AIC RATING.
E3	PROVIDE NEW BREAKER SHOWN. EXTEND BUSSING AS REQUIRED OR MAKE MODIFICATIONS NEEDED TO ACCOMMODATE NEW BREAKER. BREAKER TO MATCH EXISTING AIC RATING.
E4	PROVIDE NEW 400A PANEL 'A'.
E5	REFEED EXISTING PANEL FROM NEW PANEL 'A'. EXTEND FEEDERS AS REQUIRED.
E6	RENAME EXISTING PANEL 'A' TO 'A1'.

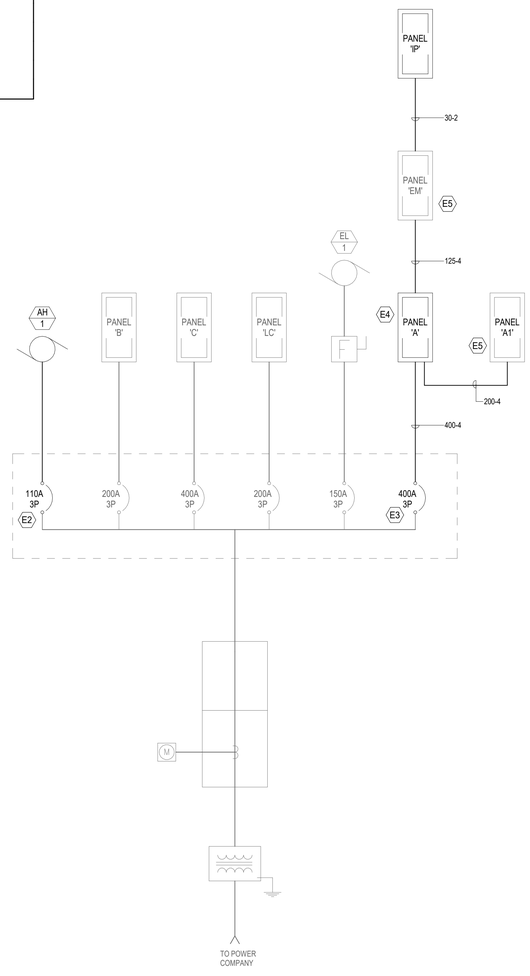

2 ONE-LINE DIAGRAM - NEW

SCALE: NO SCALE

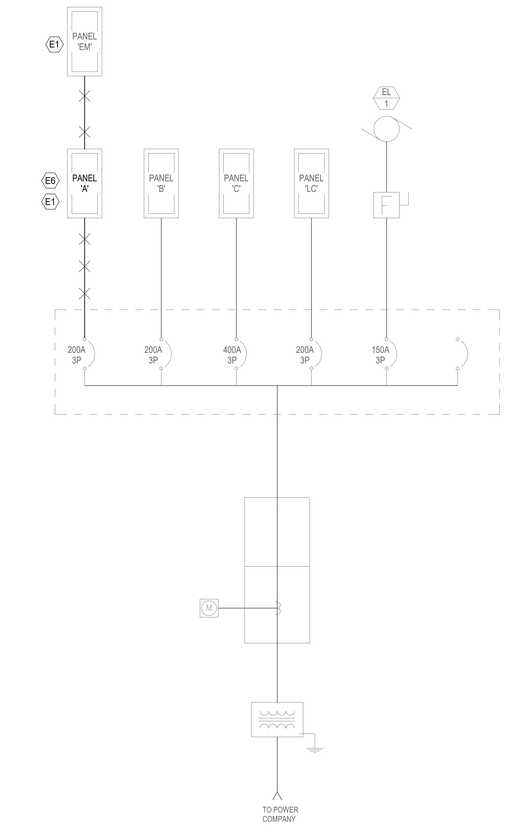

1 ONE-LINE DIAGRAM - DEMO

SCALE: NO SCALE

FFKR ARCHITECTS
730 Pacific Avenue • Salt Lake City, Utah 84104
801.521.6186 • FFKR.COM

Utah Fertility Center Outpatient Surgery Facility
1365 W Pleasant Grove Blvd, Pleasant Grove, UT 84062
UTAH FERTILITY CENTER
CONSTRUCTION DOCUMENTS - 12.MAR.2021

REGISTERED PROFESSIONAL ENGINEER
No. 7877350-2202
RYAN C. VAN VOAST
03/12/2021
STATE OF UTAH

△ DATE REVISION

PROJECT NUMBER 20087

ONE-LINE DIAGRAM

EE601

VBFA
181 East 5600 South
Murray, Utah 84107
O: (801) 530-3148
F: (801) 530-3150
www.vbfa.com
vbfa project #: 20405

3/12/2021 2:01:37 PM

Branch Panel: A1

Location: CRYO TANKS 157
Supply From: A
Mounting: SURFACE
Enclosure: Type 1

Volts: 120/208 Wye
Phases: 3
Wires: 4

A.I.C. Rating: EXISTING
Mains Type: LUGS
Mains Rating: 200 A
MCB Rating:

CKT	Circuit Description	Code	BRK	P	Size	A (VA)		B (VA)		C (VA)		Size	P	BRK	Code	Circuit Description	CKT
1	FFU 1.1-1.4		20 A	2		1498	1498						2	20 A		FFU 1.13-1.16*	2
3								1498	1498								4
5	EF-6 & EF-7		20 A	1						1392	1259		2	20 A		FFU 1.17-2.1*	6
7	ER PROCEDURE RECEP.		20 A	1		540	1259										8
9	ER PROCEDURE FLOOR RECEP.		20 A	1				180	966				1	20 A		STAFF HALL LIGHTING	10
11	RECEPTION SIGN		20 A	1						180	1109		1	20 A		HALL/PREP ROOMS LIGHTING	12
13	OUTSIDE RECEP.		20 A	1		180	1371						1	20 A		RECEPTION/DOC WORK LIGHTING	14
15	FFU 1.5-1.8		20 A	2				1498	780				1	20 A		VAV BOXES	16
17										1498	546		1	20 A		EMBRYOLOGY LAB LIGHTING	18
19	FFU 1.9-1.12*		20 A	2		1498	696						1	20 A		EF-5 & DEF-9	20
21								1498	1176				1	20 A		EF-8	22
23	EMBRYOLOGY/STORAGE LIGHTING		20 A	1						928	200		1	20 A		HEAT TRACE	24
25	LCP		20 A	1		500	0						1	20 A		SPARE	26
27	UH-1		20 A	1				528	720				1	20 A		PRE/POST 121 RECEP.*	28
29	RCP-1		20 A	1						28	900		1	20 A		HALL RECEP.*	30
31	WH-1/ WS-1		20 A	1		540	500						1	20 A		DRINKING FOUNTAIN*	32
33	B-1		20 A	1				1800	2000				1	20 A		ROOM HUMIDIFIER HU-1*	34
35	P-1*		25 A	3						2102	540		1	20 A		OPERATING ROOM EAST RECEP.*	36
37						2102	1528						1	20 A		OPERATING ROOM NORTH RECEP.*	38
39								2102	540				1	20 A		DOOR OPENER*	40
41	MA PANELS		20 A	1						120	900		1	20 A		DOOR OPENER	42
					Total Load:	13708 VA		16749 VA		11668 VA							
					Total Amps:	117 A		142 A		97 A							

Code:

1 = See Drawings For Conduit & Conductor Sizes
2 = Shunt-Trip Breaker
3 = Subfeed Breaker
4 = Provide Lock Off Device
5= GFCI Breaker
6 = GFEP Breaker

Load Classification	Connected Load	Demand Factor	Estimated Demand	Panel Totals	
Motor	29482 VA	105.35%	31058 VA		
Lighting	3859 VA	100.00%	3859 VA	**Total Conn. Load:**	42123 VA
Power	3040 VA	100.00%	3040 VA	**Total Est. Demand:**	43699 VA
N	180 VA	100.00%	180 VA	**Total Conn.:**	117 A
RCPT	5611 VA	100.00%	5611 VA	**Total Est. Demand:**	121 A
SPEC	0 VA	0.00%	0 VA		

Notes:
*PROVIDE NEW BREAKERS AS REQUIRED.

Branch Panel: EM

Location: CRYO TANKS 157
Supply From: A
Mounting: Recessed
Enclosure: Type 1

Volts: 120/208 Wye
Phases: 3
Wires: 4

A.I.C. Rating: EXISTING
Mains Type: LUGS
Mains Rating: 125 A
MCB Rating:

CKT	Circuit Description	Code	BRK	P	Size	A (VA)		B (VA)		C (VA)		Size	P	BRK	Code	Circuit Description	CKT
1	SMALL HOOD		20 A	1		552	763										2
3	SMALL HOOD		20 A	1				1104	763				3	20 A		MVP-1	4
5	BENCHTOP INCUBATOR		20 A	1						720	763						6
7	SMALL HOOD		20 A	1		552	1863						1	20 A		OPERATING ROOM LIGHTING	8
9	LARGE HOOD		20 A	1				988	967				1	20 A		ER PROCEDURE LIGHTING	10
11	LARGE HOOD		20 A	1						988	1708		2	30 A		PANEL IP	12
13	LARGE HOOD		20 A	1		988	528										14
15	BENCHTOP INCUBATOR		20 A	1				720	180				1	20 A		PRE/POST 121 RECEP	16
17	BENCHTOP INCUBATOR		20 A	1						720	180		1	20 A		PRE/POST 123 RECEP.	18
19	BENCHTOP INCUBATOR		20 A	1		720	180						1	20 A		PRE/POST 125 RECEP.	20
21	BENCHTOP INCUBATOR		20 A	1				720	180				1	20 A		PRE/POST 127 RECEP.	22
23	BENCHTOP INCUBATOR		20 A	1						720	0		1	20 A		SPARE	24
25	BENCHTOP INCUBATOR		20 A	1		720	0						1	20 A		SPARE	26
27	BENCHTOP INCUBATOR		20 A	1				720	0				1	20 A		SPARE	28
29	LARGE HOOD		20 A	1						988	0		1	20 A		SPARE	30
31	SMALL HOOD		20 A	1		552	0						1	20 A		SPARE	32
33	STEAM GENERATOR SG-1		20 A	1				605	0				1	20 A		SPARE	34
35	ER PROCEDURE RECEP.		20 A	1						900	0		1	20 A		SPARE	36
37	BENCHTOP INCUBATOR		20 A	1		552	0						1	20 A		SPARE	38
39	BENCHTOP INCUBATOR		20 A	1				552	0				1	20 A		SPARE	40
41	BENCHTOP INCUBATOR		20 A	1						720	0		1	20 A		SPARE	42
					Total Load:	7932 VA		7463 VA		8407 VA							
					Total Amps:	67 A		62 A		71 A							

Code:

1 = See Drawings For Conduit & Conductor Sizes
2 = Shunt-Trip Breaker
3 = Subfeed Breaker
4 = Provide Lock Off Device
5= GFCI Breaker
6 = GFEP Breaker

Load Classification	Connected Load	Demand Factor	Estimated Demand	Panel Totals	
Motor	0 VA	0.00%	0 VA		
Lighting	2828 VA	100.00%	2828 VA	**Total Conn. Load:**	23793 VA
RCPT	18146 VA	77.55%	14073 VA	**Total Est. Demand:**	19722 VA
SPEC	2893 VA	100.00%	2893 VA	**Total Conn.:**	66 A
				Total Est. Demand:	55 A

Notes:

Branch Panel: IP

Location: OPERATING ROOM 144
Supply From: EM
Mounting: Recessed
Enclosure: Type 1

Volts: 120/208 Single
Phases: 1
Wires: 3

A.I.C. Rating: 22k
Mains Type: BREAKER
Mains Rating: 30 A
MCB Rating:

CKT	Circuit Description	Code	BRK	P	Size	A (VA)		C (VA)		Size	P	BRK	Code	Circuit Description	CKT
1	OPERATING ROOM RECEP.		20 A	1		1348	0				1	20 A		SPARE	2
3	RCPT OPERATING ROOM 144		20 A	1				360	0		1	20 A		SPARE	4
5	RCPT OPERATING ROOM 144		20 A	1		360	0				1	20 A		SPARE	6
7	OPERATING ROOM FLOOR RECEP.		20 A	1				180	0		1	20 A		SPARE	8
					Total Load:	1708 VA		528 VA							
					Total Amps:	15 A		5 A							

Code:

1 = See Drawings For Conduit & Conductor Sizes
2 = Shunt-Trip Breaker
3 = Subfeed Breaker
4 = Provide Lock Off Device
5= GFCI Breaker
6 = GFEP Breaker

Load Classification	Connected Load	Demand Factor	Estimated Demand	Panel Totals	
RCPT	2231 VA	100.00%	2231 VA		
				Total Conn. Load:	2231 VA
				Total Est. Demand:	2231 VA
				Total Conn.:	11 A
				Total Est. Demand:	11 A

Notes:

Branch Panel: A

Location: CRYO TANKS 157
Supply From: MDP
Mounting: SURFACE
Enclosure: Type 1

Volts: 120/208 Wye
Phases: 3
Wires: 4

A.I.C. Rating: 22K
Mains Type: LUGS
Mains Rating: 400 A
MCB Rating:

CKT	Circuit Description	Code	BRK	P	Size	A		B		C		Size	P	BRK	Code	Circuit Description	CKT
1	BACKROOM RECEP.		20 A	1		1260	1464						1	20 A		EMBRYOLOGY LAB RECEP.	2
3	WEST EMBRYOLOGY RECEP.		20 A	1				1080	720				1	20 A		CRNA WORK RECEP.	4
5	SOUTH EMBRYOLOGY RECEP.		20 A	1						1080	720		1	20 A		DOC WORK RECEP.	6
7	PRINTER		20 A	1		180	720						1	20 A		COLLECTION RECEP.	8
9	OFFICE 153&151 RECEP.		20 A	1				1440	720				1	20 A		COLLECTION RECEP.	10
11	OFFICE 152 RECEP.		20 A	1						720	900		1	20 A		RECEPTION RECEP.	12
13	EMBRYOLOGY LAB RECEP.		20 A	1		540	900						1	20 A		WAITING RECEP.	14
15	STAFF HALL RECEP.		20 A	1				900	360				1	20 A		RESTROOM RECEP.	16
17	STERILIZER RECEP.		20 A	1						180	900		1	20 A		TRANSFER 102 RECEP.	18
19	STERILIZER RECEP.		20 A	1		180	900						1	20 A		TRANSFER 104 RECEP.	20
21	CLEAN ROOM RECEP.		20 A	1				540	900				1	20 A		TRANSFER 106 RECEP.	22
23	DECON RECEP.		20 A	1						360	720		1	20 A		ANDROLOGY RECEP	24
25	STAFF RESTROOM RECEP.		20 A	1		180	720						1	20 A		UNDERCABINET FRIDGE	26
27	CRASH CART RECEP.		20 A	1				180	1020				1	20 A		ICE MACHINE	28
29	CLEAN SUPPLY ROOM RECEP.		20 A	1						660	360		1	20 A		ABOVE COUNTER RECEP.	30
31	PRE/POST 127 RECEP.		20 A	1		720	1080						1	20 A		NURSE STATION RECEP.	32
33	PRE/POST 125 RECEP.		20 A	1				720	720				1	20 A		UNDERCABINET FRIDGE	34
35	PRE/POST 123 RECEP.		20 A	1						720	360		1	20 A		NURSE STATION RECEP.	36
37	DOOR ACTUATORS		20 A	1		1000	0						1	20 A		SPARE	38
39	CAMERAS		20 A	1				1260	0				1	20 A		SPARE	40
41	AH-1 SUPPLY FAN		60 A	3						4906	0		1	20 A		SPARE	42
43						4906	0						1	20 A		SPARE	44
45								4906	0				1	20 A		SPARE	46
47	SPARE		20 A	1						0	0		1	20 A		SPARE	48
49	PANEL EM		100 A	3		7932	13708										50
51								7463	16749				3	200 A		PANEL A1	52
53										8407	11668						54
					Total Load:	36379 VA		39674 VA		32656 VA							
					Total Amps:	308 A		335 A		272 A							

Code:

1 = See Drawings For Conduit & Conductor Sizes
2 = Shunt-Trip Breaker
3 = Subfeed Breaker
4 = Provide Lock Off Device
5= GFCI Breaker
6 = GFEP Breaker

Load Classification	Connected Load	Demand Factor	Estimated Demand	Panel Totals	
Motor	30482 VA	105.17%	32058 VA		
Lighting	6682 VA	100.00%	6682 VA	**Total Conn. Load:**	108709 VA
Power	3940 VA	100.00%	3940 VA	**Total Est. Demand:**	90496 VA
N	540 VA	100.00%	540 VA	**Total Conn.:**	302 A
RCPT	49580 VA	60.08%	29790 VA	**Total Est. Demand:**	251 A
SPEC	17611 VA	100.00%	17611 VA		

Notes:

FFKR ARCHITECTS
730 Pacific Avenue • Salt Lake City, Utah 84104
O 801.521.5186 • FFKR.COM

Utah Fertility Center Outpatient Surgery Facility
1365 W Pleasant Grove Blvd, Pleasant Grove, UT 84062
UTAH FERTILITY CENTER
CONSTRUCTION DOCUMENTS - 12.MAR.2021

REGISTERED PROFESSIONAL ENGINEER
No. 7877350-2202
RYAN C. VAN VOAST
03/12/2021
STATE OF UTAH

△ DATE REVISION

PROJECT NUMBER 20087

PANEL SCHEDULES AND CALCULATIONS

EE602

VBFA
181 East 5600 South
Murray, Utah 84107
O: (801) 530-3148
F: (801) 530-3150
www.vbfa.com
vbfa project #: 20405

3/12/2021 2:01:37 PM

LIGHTING FIXTURE SCHEDULE

TYPE	CONSTRUCTION				LIGHT SOURCE					ELECTRICAL				PRODUCT			NOTE
	DESCRIPTION	LENS/LOUVER	FINISH	MOUNTING	LAMP	LUMENS DOWN	LUMENS UP	LMS/FT	CCT	CRI	DIMMING	VOLT	VA	VA/FT	MFR	CATALOG NUMBER	EQUIVALENT MANUFACTURERS	
DL1	4" DIA DOWNLIGHT. SEMI-SPECULAR CLEAR.			RECESSED	LED	1000 lm	0 lm		3500 K	80	0-10V TO 1%	120 V	9 VA		GOTHAM	EVO4 35/10 AR WD LSS MVOLT GZ1		
DL2	4" DIA. DOWNLIGHT, SEMI-SPECULAR CLEAR, RATED FOR SURGICAL SUITE,	POLYCARBONATE, REGRESSED	ANTIMICROBIAL	RECESSED	LED	1500 lm	0 lm		4000 K	85	0-10V TO 1%	120 V	22 VA		GOTHAM	EVO4SG 40/15 4DFRAMF SMO MVOLT EZ1		
DL3	2" DIA DOWNLIGHT. SEMI-SPECULAR CLEAR. NARROW BEAM.			RECESSED	LED	500 lm	0 lm		3500 K	80	0-10V TO 1%	120 V	6 VA		GOTHAM	EVO2 35/05 AR WD LSS ND MVOLT GZ1		
NL1	4" WIDE PERMITER FILL LINEAR LIGHT. REFER TO DWGS FOR LENGTH AND QUANTITY.			RECESSED	LED	0 lm	0 lm	400	3500 K	80	0-10V TO 1%	120 V	0 VA	4	PRUDENTIAL	P43-PSTD FLSH LED35 LO RXX XX AWL D1R WTW SC XX UNV DM01		
NL2	2"W LINEAR IN CUSTOM RECTANGULAR SHAPE. REFER TO DWGS FOR LENGTH AND QUANTITY.	FLUSH ACRYLIC FROSTED, SNAP-IN		RECESSED	LED	0 lm	0 lm	400	3500 K	80	0-10V TO 1%	120 V	0 VA	4	MARK	SL2L LOP XFT FLP XX 80CRI 35K 400LMF MIN1 120		
NL3	6"W PERIMETER LINEAR WALL WASH. 800LM/FT. REFER TO DWGS FOR EXACT LENGTH.			RECESSED, GRID	LED	0 lm	0 lm	800	3500 K	80	0-10V TO 1%	120 V	0 VA	8.5	FOCAL POINT	FWSL FL 800LF 35K 1C UNV L11 U WH XFT XIN		
PL1	7" DIA X 9"H GLASS PENDANT. CLEAR OUTER GLASS WITH WHITE FROSTED INNER GLASS.	CLEAR OUTER GLASS WITH FROSTED INNER GLASS		PENDANT	LED	180 lm	0 lm	0	3500 K	85	ELV	120 V	3 VA		KUZCO	VICTORIA MP3007 3500K		
PL2	4"DIA X 11"H. PENDANT. CLEAR OUTER GLASS WITH WHITE FROSTED INNER GLASS.	CLEAR OUTER GLASS WITH FROSTED INNER GLASS		PENDANT	LED	180 lm	0 lm	0	3500 K	85	ELV	120 V	3 VA		KUZCO	VICTORIA MP3004 3500K		
PL3	5"DIA X 8.5"H. PENDANT. CLEAR OUTER GLASS WITH WHITE FROSTED INNER GLASS.	CLEAR OUTER GLASS WITH FROSTED INNER GLASS		PENDANT	LED	180 lm	0 lm	0	3500 K	85	ELV	120 V	3 VA		KUZCO	VICTORIA MP3005 3500K		
RL1	EXISTING 2X4 VOLUMETRIC TROFFER			RECESSED	LED	4800 lm	0 lm		3500 K	80	0-10V	120 V	38 VA		LITHONIA	2VTL4 48L ADP LP835		
RL2	2'X4' TROFFER RATED FOR SURGICAL SUITE	SEALED	ANTIMICROBIAL	RECESSED	LED	13800 lm	0 lm		4000 K	95	0-10V TO 1%	120 V	148 VA		AMICO	L-SURGLED 2X4 120 L40 B M SYM GM		
RL3	2'X4' TROFFER FOR CLEAN SPACE	WIPE DOWN RATED	ANTIMICROBIAL	RECESSED, GRID	LED	5000 lm	0 lm		4000 K	80	0-10V TO 1%	120 V	39 VA		LITHONIA	2SRTL G L48 5000LM IAW AFL MVOLT EZ1 40K 80CRI DWAM		
RL4	2'X2' VOLUMETRIC TROFFER			RECESSED, GRID	LED	3300 lm	0 lm		3500 K	80	0-10V TO 1%	120 V	26 VA		LITHONIA	2VTL2 33L ADP EZ1 LP835		
RL5	2'X2' TROFFER FOR CLEAN SPACE	WIPE DOWN RATED	ANTIMICROBIAL	RECESSED, GYP	LED	3000 lm	0 lm		4000 K	80	0-10V TO 1%	120 V	27 VA		LITHONIA	2SRTL G L24 3000LM IAW AFL MVOLT EZ1 40K 80CRI DWAM		
RL6	SAME AS RL3 EXCEPT WITH FLANGE KIT	WIPE DOWN RATED	ANTIMICROBIAL	RECESSED, GYP	LED	5000 lm	0 lm		4000 K	80	0-10V TO 1%	120 V	39 VA		LITHONIA	2SRTL F L48 5000LM IAW AFL MVOLT EZ1 40K 80CRI DWAM		
UC1	UNDERCABINET LIGHT. PROVIDE SECTION LENGTHS AS REQUIRED TO MATCH CONTINUOUS LENGTHS SHOWN ON DRAWINGS.	FROSTED ACRYLIC	ANTIMICROBIAL	SURFACE	LED	0 lm	0 lm	300	3500 K	80	0-10V	120 V	0 VA	6	KELVIX	UCX 3040 010V 120277 WH		
WL1	DECORATIVE WALL SCONCE WITH GLASS-ACRYLIC CYLINDER. 5"W X 15"H. ADA COMPLIANT.			WALL	LED	553 lm	0 lm	0	3500 K	90	0-10V	120 V	9 VA		TECH LIGHTING	700WSLNG 1 XX -LED935		
WL2	2'L LINEAR VANITY LIGHT.	WHITE ACRYLIC DIFFUSER	GOLD	WALL	LED	1460 lm	0 lm		3500 K	90	ELV	120 V	17 VA		KUZCO	VL18224-GD-3500K	PURE EDGE	
WL3	2'L WALL BRACKET LIGHT FIXTURE WITH INTEGRATED OCCUPANCY SENSOR	IMPACT MODIFIED LINEAR FACETED REFRACTOR		WALL	LED	1800 lm	0 lm		3500 K	82	0-10V TO 1%	120 V	18 VA		LITHONIA	WL2 18L EZ1 LP835 NES7		
XL1	EXIT SIGN. GREEN. UNIVERSAL MOUNTING. EDGE-LIT.			UNIVERSAL	LED	0 lm	0 lm		0 K	0		120 V	5 VA		LITHONIA	EDGX X G SD		
YL1	LOW-PROFILE STRIPLIGHT 4FT LONG WITH ONE LAMP	ACRYLIC FROSTED LENS		SURFACE	LED	4000 lm	0 lm		3500 K	80	0-10V TO 1%	120 V	32 VA		LITHONIA	CSS L48 4000LM MVOLT 40K 80CRI		
YL2	8'L LOW-PROFILE STRIPLIGHT	ACRYLIC FROSTED LENS		SURFACE	LED	8596 lm	0 lm		3500 K	80	0-10V	120 V	72 VA		LITHONIA	CSS L96 8000LM MVOLT 40K 80CRI		
ZL1	DUAL HEAD SURGICAL BOOM LIGHT			BOOM	LED	13000 lm	0 lm		4500 K	95		120 V	264 VA		AMICO	L MLED65 DC ST		

Luminaire..

1 Refer to Luminaire description for fixture requirements. Manufactures model numbers may not be specific or complete. The contractor is responsible to provide complete fixtures as described on this schedule with all mounting hardware and equipment for a complete installation.

2 Refer to the architectural reflected ceiling drawings for exact fixture locations and ceiling types. Verify exact ceiling types and bring to the attention of the architect and electrical engineer any discrepancies prior to bid. Fixtures shall match architectural ceiling types.

3 Provide all fixture support and seismic bracing to secure fixture to structure, walls and ceiling systems. Refer to mounting details for additional requirements. Provide all pole bases as shown on the details.
4 Prior approval shall be required for all manufactures who are not listed on this schedule. The prior approvals shall be submitted to the electrical engineer (7) working days prior to the bid. Prior approvals received after this time cut-off shall not be reviewed or approved.

5 Submittals for prior approval shall be equivalent to the specified fixtures and reviewed and signed by the principle of the organization that is submitting for approval. Provide complete fixture submittals as listed in the specification. All information that does not apply to the fixture being submitted shall be crossed out. The electrical engineer shall be the final determination if the fixture is equivalent or not.

6 Fixtures that have been reviewed and approved as equivalent to the specified fixtures shall be listed in and addendum prior to bid. Light fixtures without prior approval are rejected and contractor shall base their bid on the approved listed fixtures. A verbal approval will not be given or approved by VBFA at any time.
7 Any additional time required to verify if submitted fixture meets all photometric requirements shall be paid by the agency requesting approval. Photometric point-by-point plans may be required from the agency submitting for approval indicating equivalency.

8 Color temperature for all lamping shall be 4000K unless noted otherwise in the schedule.
9 Verify exact fixture finishes with the architect prior to submittal.
10 Provide minimum 5 year warranty on all light fixtures.
11 LED light fixtures shall meet LM79 and LM80 standards with +50,000 hour L70 lamp life
12 Luminaire shall be listed per NEC 410.6.
13 Lumens specified for fixtures with integral LEDs are total delivered fixture lumens
14 Fixtures identified as emergency on the plans shall be provided with an emergency battery pack or remote inverter with a 1400 lumen output minimum for each emergency fixture.

EQUIPMENT SCHEDULE

TYPE	DESCRIPTION	ELECTRICAL				WIRE				COND	OVER CURRENT PROTECTION						STR	REMARKS
		VOLT	PHASE	LOAD	FLA	SETS	QTY	SIZE	GND	SIZE	OCPD/ MOCP	TYPE	DISCONNECT SIZE	DISCONNECT POLE	FUSE SIZE		NEMA SIZE	
AH - 1	AIR HANDLER	208	3	105 MCA	84.0	1	3	2	6	1	110	C1	200	3	110		-	9 A
B - 1	BOILER	120	1	15 FLA	15.0	1	2	12	12	3/4	20	C1	-	-	-		-	4 A
EF - 5	EXHAUST FAN	120	1	1/6 HP	5.8	1	2	12	12	3/4	20	C1	-	-	-		-	4 A
EF - 6	EXHAUST FAN	120	1	1/6 HP	5.8	1	2	12	12	3/4	20	C1	-	-	-		-	4 A
EF - 7	EXHAUST FAN	120	1	1/6 HP	5.8	1	2	12	12	3/4	20	C1	-	-	-		-	4 A
EF - 8	EXHAUST FAN	120	1	1/3 HP	9.8	1	2	12	12	3/4	20	C1	-	-	-		-	4 A
EF - 9	EXHAUST FAN	120	1	1/3 HP	9.8	1	2	12	12	3/4	20	C1	-	-	-		-	4 A
FFU - 2.1	FAN FILTER UNIT	208	1	1/3 HP	4.9	1	2	12	12	3/4	20	C1	-	-	-		-	4 A
FFU - 1.1-1.18	FAN FILTER UNIT	208	1	1/3 HP	3.6	1	2	12	12	3/4	20	C1	-	-	-		-	4 A
P - 1	PUMP	208	3	5 HP	17.5	1	3	10	10	3/4	25	C1	30	3	25		-	1 A 11C
UH - 1	UNIT HEATER	120	1	0.04 HP	4.4	1	2	12	12	3/4	20	C1	-	-	-		-	4 A
WH - 1	WATER HEATER	120	1	180 W	1.5	1	2	12	12	3/4	20	C1	-	-	-		-	12 A
RCP - 1	RECIRCULATION PUMP	120	1	28 W	0.2	1	2	12	12	3/4	20	C1	-	-	-		-	4 A
WS - 1	WATER SOFTENER	120	1	180 W	1.5	1	2	12	12	3/4	20	C1	-	-	-		-	12 A
MVP - 1	MEDICAL VACUUM PUMP	208	3	3 HP	11.0	1	3	12	12	3/4	20	C1	-	-	-		-	13 A
HU - 1	ROOM HUMIDIFIER	120	1	2 KW	16.7	1	2	12	12	3/4	20	C1	-	-	-		-	4 A
SG - 1	STEAM GENERATOR	120	1	6.30 MCA	5.0	1	2	12	12	3/4	20	C1	-	-	-		-	4 A
MA - 1	MEDICAL GAS ALARM PANEL	120	1	0.25 MCA	0.2	1	2	12	12	3/4	20	C1	-	-	-		-	13 A
AH - 1E	AH-1 EM SUPPLY/RETURN FANS	208	3	40.90 FLA	40.9	1	3	6	10	3/4	60	C1	60	3	60		-	9 A

ABBREVIATIONS:
KW = KILOWATTS
V/PH = VOLTAGE/PHASE
HP = HORSEPOWER
W = WATTS
VA = VOLT AMPERES
KVA = KILOVOLT AMPERES
FLA = FULL LOAD AMPERES
MCA = MINIMUM CIRCUIT AMPACITY
DISC = DISCONNECT
GND = GROUND
STR = STARTER
PL = POLE
OCPD = OVERCURRENT PROTECTIVE DEVICE
COND = CONDUIT
MOCP = MAXIMUM OCPD (LISTED BY THE MANUFACTURER)

REMARKS:
1. NEMA 1 FUSED DISCONNECT SWITCH
2. NEMA 1 NON-FUSED DISCONNECT SWITCH
3. BREAKER IN ENCLOSURE
4. MANUAL STARTER WITH THERMAL OVERLOAD
5. MANUAL MOTOR CONTROLLER W/OUT THERMAL OVERLOAD
6. MAGNETIC STARTER
7. MAGNETIC STR/NON-FUSED DISCONNECT COMBINATION
8. MAGNETIC STR/FUSED DISCONNECT COMBINATION
9. NEMA 3R FUSED DISCONNECT SWITCH
10. NEMA 3R NON-FUSED DISCONNECT SWITCH
11. VARIABLE FREQUENCY DRIVE
12. RECEPTACLE/SPECIAL PURPOSE OUTLET/ETC.
13. DIRECT CONNECTION
14. DUCT DETECTOR IN RETURN AIR DUCT
15. CONTROLLED WITH LIGHTS
16. LM-EB DISCONNECT W/CNTRL WIRING TO VFD

REMARKS:
A. FURNISHED, INSTALLED AND CONNECTED UNDER DIVISION 26.
B. FURNISHED AND INSTALLED UNDER ANOTHER DIVISION REQUIRING CONNECTION UNDER DIV 26.
C. FURNISHED UNDER ANOTHER DIVISION BUT INSTALLED AND CONNECTED UNDER DIV 26.
D. FURNISHED, INSTALLED AND CONNECTED UNDER ANOTHER DIVISION.
E. FURNISHED AND INSTALLED UNDER DIV 26 REQUIRING CONNECTION UNDER ANOTHER DIVISION.

OCPD TYPES:
C1 = THERMAL MAGNETIC CIRCUIT BREAKER
C2 = MAGNECTIC ONLY CIRCUIT BREAKER

NOTES:
- THE DIVISION 26 CONTRACTOR MAY INCREASE THE CONDUIT SIZE BY ONE INCREMENTAL SIZE TO FACILITATE INSTALLATION OR TO HELP WITH MATERIAL AVAILABILITY/COST.

GENERAL NOTE: THE EC SHALL COORDINATE ALL REQUIREMENTS (IE: MOCP SIZE, UNIT THERMAL PROTECTION, ETC) WITH APPROVED MECHANICAL SHOP DRAWINGS/SUBMITTALS AND BRING UP ANY DISCREPANCIES WITH THE ELECTRICAL ENGINEER OF RECORD IN WRITING PRIOR TO ROUGH-IN.

RELAY PANEL CONTROL SCHEDULE

PANEL: LCP
LOCATION: CRYO TANKS 157
MOUNTING: SURFACE
CONTROL CIRCUIT:
VOLTAGE: 120

SEQUENCE
(a) AFTERHOURS
(w) WORK HOURS
(x) ALL HOURS

RELAY #	DESCRIPTION	VA	CIRCUIT	DIMMING	CONTROL DEVICE	ASSIGNED SWITCH(S)	A	B	C	D	E	F	G
1	VESTIBULE 100			0-10V		A		x					
2	WAITING 101 WALL SCONCE			0-10V		A			x				
3	WAITING 101 LINEAR LIGHTS			0-10V	PC1	A			x				
4	WAITING 101 PENDANTS			ELV	PC1	A			x				
5	WAITING 101 DOWNLIGHTS			0-10V		A			x				
6	RECEPTION 103 PENDANTS			ELV		A			x				
7	RECEPTION 103 WALL WASH			0-10V		A			x				
8	HALL H001					B, C1			x				
9	PRE-POST CORRIDOR C001 DOWNLIGHTS								x				
10	STAFF HALL H002					C2, D			x				
11	SEMI-RESTRICTED CORRIDOR C002								x				
12	STAFF CORRIDOR C003								x				
13	PRE-POST CORRIDOR C001 LINEAR			0-10V		B,, C1			x				
14	RECEPTION 103 SIGN								x				
15	SPARE												
16	SPARE												
17	SPARE												
18	SPARE												
19	SPARE												
20	SPARE												
21	SPARE												
22	SPARE												
23	SPARE												
24	SPARE												
25	SPARE												
26	SPARE												
27	SPARE												
28	SPARE												
29	SPARE												
30	SPARE												

SCHEDULE	PROGRAMMING REQUIREMENTS
A:	TIMED ON/TIMED OFF
B:	TIMED ON/PHOTOCELL OFF
C:	MANUAL ON/TIMED OFF
D:	PHOTOCELL ON/TIMED OFF
E:	PHOTOCE...
F	MANUAL...
G	AUTO...

PER OWNER'S REQUIREMENTS

LEGEND
MS: MOTION SENSOR
PC: PHOTOCELL

DEDICATED OVERRIDE SWITCHES:
ID:

GENERAL NOTES:
1. CONFIRM SWITCHING SCHEME WITH OWNER PRIOR TO PROGRAMMING.
2. DIMMING MODULE TO BE COMPATIBLE WITH LUMINAIRE DIMMING PROTOCOL.
3. PROVIDE SEPARATION BARRIER FOR RELAYS CONTROLLING EMERGENCY CIRCUITS.
4. EMERGENCY RELAYS SHALL BE N.C. IN THE EVENT OF A POWER OUTAGE.
5. PROVIDE ASTRONOMICAL TIME CLOCK WITH BATTERY BACK UP.
6. SCHEDULE ON-SITE MEETING WITH ENGINEER AND ARCHITECT TO PROGRAM FINAL DIMMING LEVELS ONCE LIGHTS ARE INSTALLED AND THE LIGHTING CONTROL IS FUNCTIONING.
7. ALL LOW VOLTAGE SWITCHES SHALL BE PROGRAMMED TO ACT AS OVER-RIDE BUTTONS FOR THE SPACE IT IS CONTROLLING FOR AFTER-HOUR OPERATION UP TO 2-HOURS MAX.
8. AFTER-HOUR OPERATION SHALL PROVIDE A BLINK-WARNING 5 MINUTES PRIOR TO TURNING OFF THE LIGHTS IN OVER-RIDE MODE
9 DEDICATED OVER-RIDE SWITCHES SHALL ONLY BE OPERABLE DURING OFF HOURS AND 30 MINUTES PRIOR TO LIGHTS SCHEDULED TO BE TURNED OFF.

FFKR ARCHITECTS
730 Pacific Avenue • Salt Lake City, Utah 84104
801.521.5186 • FFKRARCH.COM

Utah Fertility Center Outpatient Surgery Facility
1365 W Pleasant Grove Blvd, Pleasant Grove, UT 84062
UTAH FERTILITY CENTER
CONSTRUCTION DOCUMENTS - 12.MAR.2021

△ DATE REVISION

PROJECT NUMBER 20087

ELECTRICAL SCHEDULES

EE603

VBFA
181 East 5600 South
Murray, Utah 84107
O: (801) 530-3148
F: (801) 530-3150
www.vbfa.com
vbfa project #: 20405

3/12/2021 2:01:37 PM

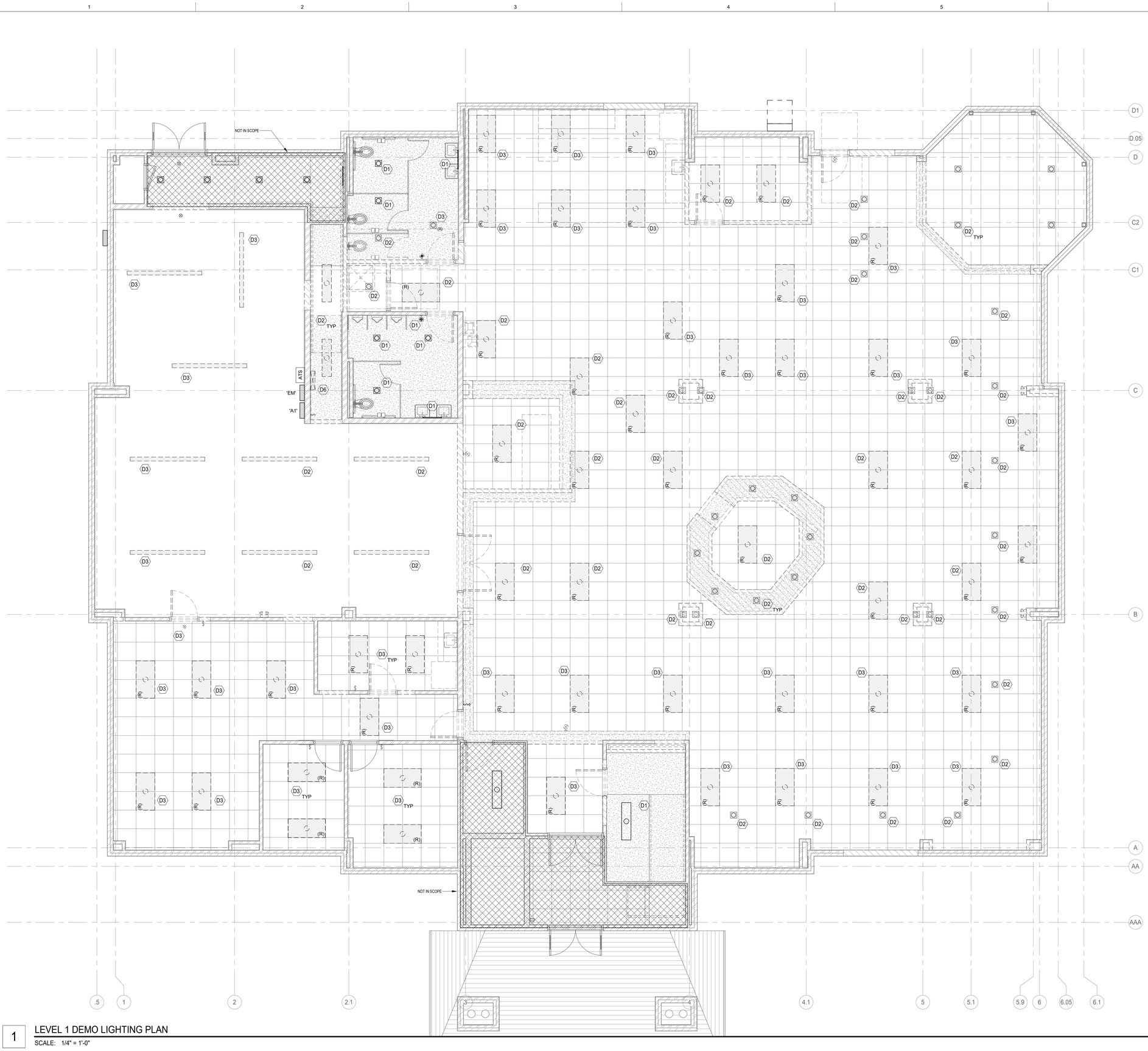

SHEET KEYNOTES

D1	EXISTING DEVICE/FIXTURE TO REMAIN. PROTECT AND MAINTAIN CIRCUIT INTEGRITY.
D2	DEMOLISH EXISTING DEVICE/FIXTURE. REMOVE CONDUIT AND WIRE BACK TO NEAREST REMAINING DEVICE. MAINTAIN CIRCUIT INTEGRITY. IF NO DEVICES REMAIN, REMOVE CONDUIT AND WIRE BACK TO SOURCE AND MARK BREAKER AS SPARE. PROVIDE NEW UPDATED TYPED PANEL SCHEDULE INDEX. IF CONDUIT IS INACCESSIBLE, CUT CONDUIT FLUSH WITH STRUCTURAL SURFACE.
D3	RELOCATE EXISTING DEVICE/FIXTURE. EXTEND CIRCUIT AS REQUIRED.
D6	DEMOLISH EXISTING LIGHTING CONTROL PANEL. FIELD VERIFY EXACT LOCATION. RELOCATE ANY EXISTING LIGHTING ZONES TO REMAIN TO NEW LIGHTING CONTROL PANEL.

GENERAL DEMOLITION NOTES

A. EC SHALL COORDINATE WITH ALL OTHER TRADES DURING DEMOLITION AND CONSTRUCTION TO FACILITATE TIMELY WORK.
B. ALL AREAS ARE TO BE KEPT CLEAN AND CLEAR OF DEBRIS AT ALL TIMES.
C. CONTRACTOR SHALL PATCH AND REPAIR ALL WALLS, CEILINGS ETC. TO MATCH EXISTING CONDITIONS. PENETRATIONS SHALL BE SEALED WITH FIRE RATED CAULK.
D. ROUTE ALL CONDUIT IN A NEAT AND ORDERLY FASHION. ALL CONDUIT SHALL BE CONCEALED ABOVE CEILINGS OR IN WALLS OR FINISHED SPACES UNLESS OTHERWISE INDICATED ON THE PLANS.
E. DEVICES SHOWN ON DEMOLITION SHEETS ARE GATHERED FROM AS-BUILT DRAWINGS AND FIELD INVESTIGATION. NOT ALL DEVICES ARE SHOWN. DEVICE PLACEMENT IS SCHEMATIC AND NOT EXACT. CONTRACTOR TO FIELD VERIFY FOR EXACT LOCATIONS AND COORDINATEWORK WITH ALL OTHER DEVICES, EQUIPMENT, CONDUIT, ETC. WHETHER OR NOT SHOWN TO COMPLETE PROJECT.
F. CONTRACTOR TO COORDINATE WITH OWNER FOR ITEMS TO BE SALVAGED PRIOR TO DEMOLITION. CONTRACTOR RESPONSIBLE FOR DISPOSING OF ANY MATERIAL THAT THE OWNER DOES NOT WANT TO KEEP.
G. CAP AND LABEL ALL EMPTY CONDUIT TO REMAIN.

1 LEVEL 1 DEMO LIGHTING PLAN
SCALE: 1/4" = 1'-0"

NORTH

FFKR ARCHITECTS
730 Pacific Avenue • Salt Lake City, Utah 84104
801.521.6186 • FFKR.COM

Utah Fertility Center Outpatient Surgery Facility
1365 W Pleasant Grove Blvd, Pleasant Grove, UT 84062
UTAH FERTILITY CENTER
CONSTRUCTION DOCUMENTS - 12.MAR.2021

REGISTERED PROFESSIONAL ENGINEER
No. 7877350-2202
RYAN C. VAN VOAST
03/12/2021
STATE OF UTAH

△ DATE REVISION

PROJECT NUMBER 20087

LEVEL 1 LIGHTING DEMO PLAN

ED101

VBFA
181 East 5600 South
Murray, Utah 84107
O: (801) 530-3148
F: (801) 530-3150
www.vbfa.com
vbfa project #: 20405

3/12/2021 2:01:35 PM

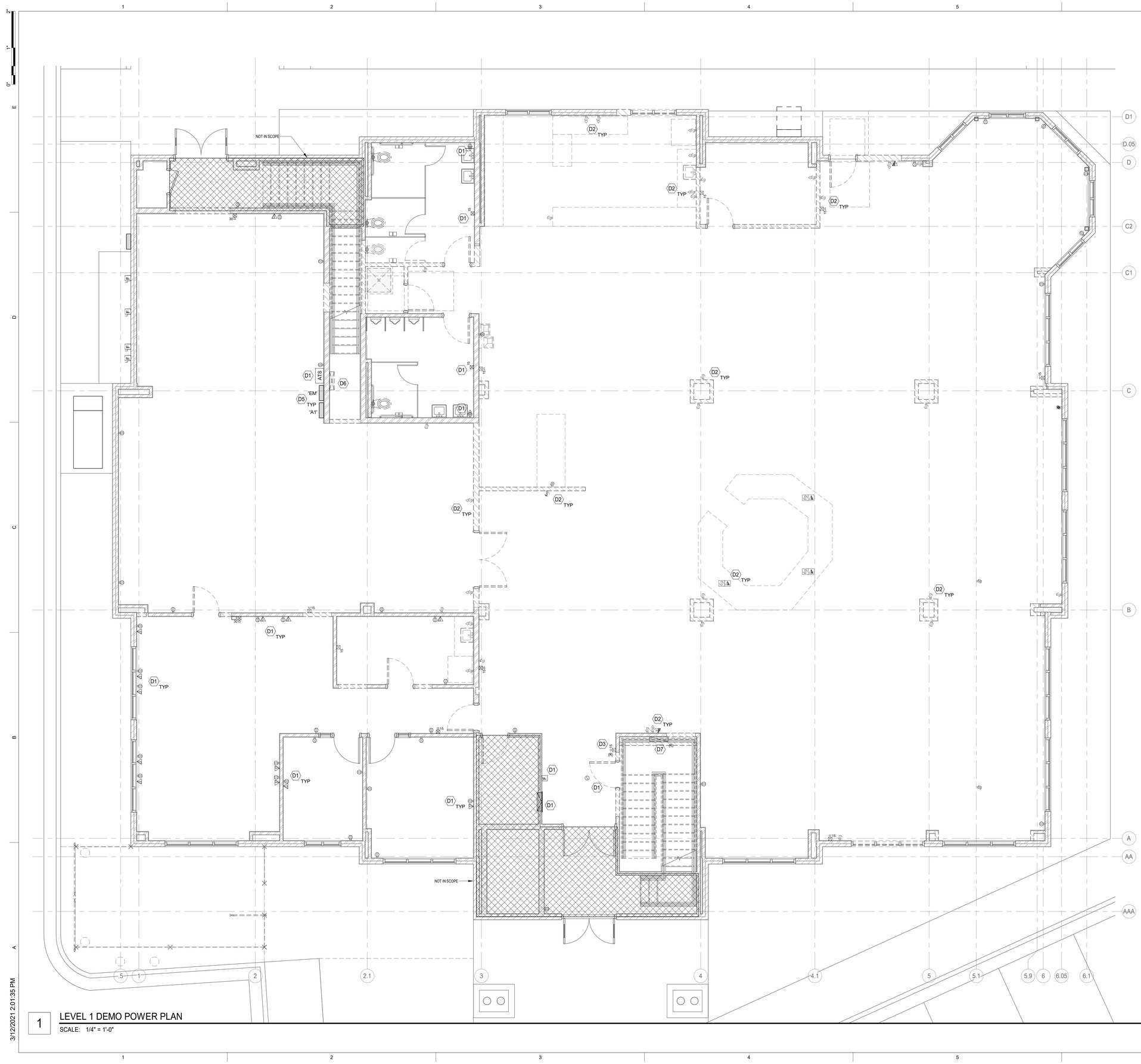

SHEET KEYNOTES

D1	EXISTING DEVICE/FIXTURE TO REMAIN. PROTECT AND MAINTAIN CIRCUIT INTEGRITY.
D2	DEMOLISH EXISTING DEVICE/FIXTURE. REMOVE CONDUIT AND WIRE BACK TO NEAREST REMAINING DEVICE. MAINTAIN CIRCUIT INTEGRITY. IF NO DEVICES REMAIN, REMOVE CONDUIT AND WIRE BACK TO SOURCE AND MARK BREAKER AS SPARE. PROVIDE NEW UPDATED TYPED PANEL SCHEDULE INDEX. IF CONDUIT IS INACCESSIBLE, CUT CONDUIT FLUSH WITH STRUCTURAL SURFACE.
D3	RELOCATE EXISTING DEVICE/FIXTURE. EXTEND CIRCUIT AS REQUIRED.
D5	TEMPORARILY REMOVE EXISTING SURFACE MOUNTED ELECTRICAL EQUIPMENT OFF WALL TO ACCOMMODATE NEW 1-HR FIRE RATED BARRIER. REINSTALL EXISTING EQUIPMENT ON NEW FIRE RATED WALL. PROVIDE EXTENDER BOXES FOR RECESSED DEVICES TO REMAIN.
D6	DEMOLISH EXISTING LIGHTING CONTROL PANEL. FIELD VERIFY EXACT LOCATION. RELOCATE ANY EXISTING LIGHTING ZONES TO REMAIN TO NEW LIGHTING CONTROL PANEL.
D7	RELOCATE EXISTING CARD ACCESS CONTROL PANEL TO OFFICE 151. EXTEND CIRCUITS AND CONDUCTORS AS REQUIRED. COORDINATE EXACT LOCATION OF CONTROL PANEL WITH OWNER PRIOR TO ROUGH-IN.

GENERAL DEMOLITION NOTES

A. EC SHALL COORDINATE WITH ALL OTHER TRADES DURING DEMOLITION AND CONSTRUCTION TO FACILITATE TIMELY WORK.
B. ALL AREAS ARE TO BE KEPT CLEAN AND CLEAR OF DEBRIS AT ALL TIMES.
C. CONTRACTOR SHALL PATCH AND REPAIR ALL WALLS, CEILINGS ETC. TO MATCH EXISTING CONDITIONS. PENETRATIONS SHALL BE SEALED WITH FIRE RATED CAULK.
D. ROUTE ALL CONDUIT IN A NEAT AND ORDERLY FASHION. ALL CONDUIT SHALL BE CONCEALED ABOVE CEILINGS OR IN WALLS OR FINISHED SPACES UNLESS OTHERWISE INDICATED ON THE PLANS.
E. DEVICES SHOWN ON DEMOLITION SHEETS ARE GATHERED FROM AS-BUILT DRAWINGS AND FIELD INVESTIGATION. NOT ALL DEVICES ARE SHOWN. DEVICE PLACEMENT IS SCHEMATIC AND NOT EXACT. CONTRACTOR TO FIELD VERIFY FOR EXACT LOCATIONS AND COORDINATEWORK WITH ALL OTHER DEVICES, EQUIPMENT, CONDUIT, ETC. WHETHER OR NOT SHOWN TO COMPLETE PROJECT.
F. CONTRACTOR TO COORDINATE WITH OWNER FOR ITEMS TO BE SALVAGED PRIOR TO DEMOLITION. CONTRACTOR RESPONSIBLE FOR DISPOSING OF ANY MATERIAL THAT THE OWNER DOES NOT WANT TO KEEP.
G. CAP AND LABEL ALL EMPTY CONDUIT TO REMAIN.

1 LEVEL 1 DEMO POWER PLAN
SCALE: 1/4" = 1'-0"

3/12/2021 2:01:35 PM

FFKR ARCHITECTS
730 Pacific Avenue • Salt Lake City, Utah 84104
801.521.6186 • FFKR.COM

Utah Fertility Center Outpatient Surgery Facility
1365 W Pleasant Grove Blvd, Pleasant Grove, UT 84062
UTAH FERTILITY CENTER
CONSTRUCTION DOCUMENTS - 12.MAR.2021

REGISTERED PROFESSIONAL ENGINEER
No. 7877350-2202
RYAN C. VAN VOAST
03/12/2021
STATE OF UTAH

△ DATE REVISION

PROJECT NUMBER 20087

LEVEL 1 POWER DEMO PLAN

ED102

VBFA
181 East 5600 South
Murray, Utah 84107
O: (801) 530-3148
F: (801) 530-3150
www.vbfa.com
vbfa project #: 20405

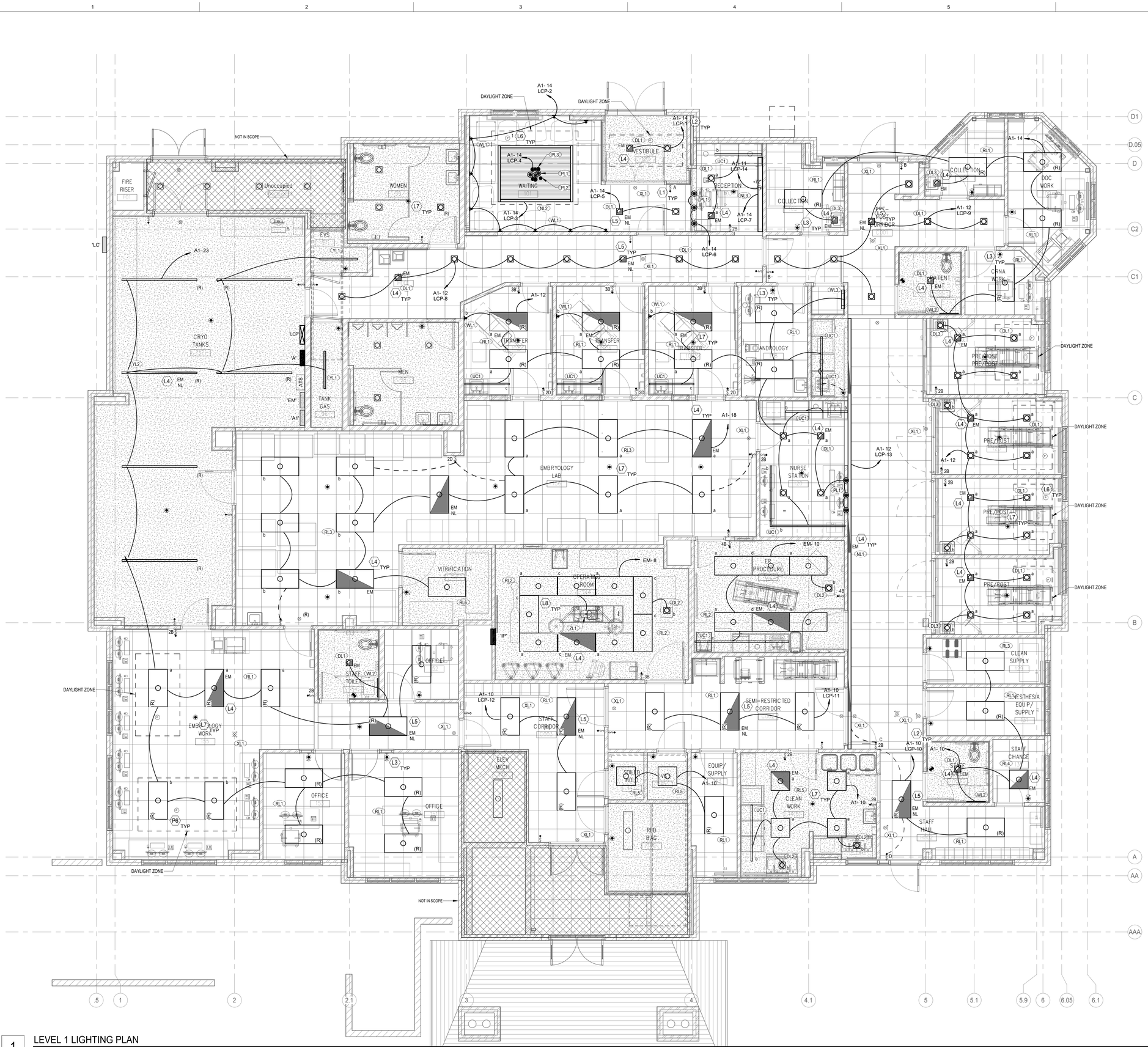

1 LEVEL 1 LIGHTING PLAN

SCALE: 1/4" = 1'-0"

SHEET KEYNOTES

L1	PROVIDE LOW VOLTAGE SWITCH AT APPROXIMATE LOCATION SHOWN TO CONTROL THE LIGHTS ON THE INDICATED ZONE. TIE TO LIGHTING RELAY PANEL AND PROGRAM SWITCH FOR MANUAL OVER-RIDE. LIGHTS SHALL DELIVER A BLINK WARNING 5 MINUTES PRIOR TO TIMED SHUT OFF. OVERRIDE SHALL ALLOW LIGHTS TO STAY ON FOR 2 HOURS MAXIMUM BEFORE TIMING OUT AND TURN OFF DURING AFTER HOURS.
L2	ROUTE TO CIRCUIT INDICATED VIA LIGHTING RELAY PANEL ON ZONE INDICATED.
L3	FURNISH AND INSTALL A WALL BOX DUAL TECHNOLOGY VACANCY SENSOR WITH INTEGRATED PHOTOCELL, VANDAL-RESISTANT LENS, AND ADJUSTABLE HORIZONTAL FIELD-OF-VIEW. SET INITIAL TIME DELAY TO 15 MINUTES AND DAYLIGHT HARVESTING AT 50 FOOTCANDLES. SET FINAL SETTINGS AS PER OWNER'S REQUIREMENTS.
L4	PROVIDE AN EMERGENCY BATTERY PACK FOR EMERGENCY LIGHTS. FIXTURE SHALL DELIVER 1400 LUMENS MINIMUM UPON COMMERCIAL POWER FAILURE REGARDLESS OF CONTROL DEVICE POSITION. RUN AN UNSWITCHED HOT CONDUCTOR AHEAD OF THE SWITCHING DEVICE TO THE BATTERY PACK FROM THE SAME CIRCUIT AS NORMAL FIXTURE OPERATION. HATCHED AREAS ON LINEAR FIXTURES INDICATE EMERGENCY SECTION ON THE LUMINAIRE.
L5	CIRCUIT LIGHT FIXTURE INDICATED AS NIGHT LIGHT SO THAT LIGHT REMAINS ON ALWAYS. WHERE LOCATED IN A DAYLIGHT ZONE, DAYLIGHT HARVESTING WILL STILL TAKE PRIORITY.
L6	FURNISH AND INSTALL A PHOTOCELL TO DIM THE LIGHTS INDICATED IN THE SPACE WHEN SUFFICIENT DAYLIGHT IS PRESENT. COORDINATE WITH OWNER/ARCHITECT FOR FOOTCANDLE THRESHOLD REQUIREMENTS. PROVIDE CONDUIT, CONDUCTORS, POWER PACKS, ETC. AS NEEDED FOR A COMPLETE INSTALLATION.
L7	FURNISH AND INSTALL A CEILING MOUNTED DUAL-TECHNOLOGY VACANCY SENSOR TO CONTROL THE LIGHTING IN THE SPACE. PROVIDE APPROPRIATE TYPE TO MATCH CEILING HEIGHT APPLICATION. LOCATE SENSOR IN SPACE FOR MAXIMUM COVERAGE. PROVIDE ADDITIONAL SENSORS AS NEEDED. SENSOR MANUFACTURER TO PROVIDE A LAYOUT SHOWING ADEQUATE COVERAGE OF EACH SPACE. IN AREAS WHERE MORE THAN ONE SENSOR IS NEEDED, DETECTION OF ANY OCCUPANCY BY ANY SENSOR IN THE SPACE WILL TURN LIGHTS ON IN THAT SPACE. INSTALL SENSOR A MINIMUM OF 3 FEET FROM DIFUSER. PROVIDE CONDUIT, CONDUCTORS, POWER PACKS, ETC. FOR A COMPLETE INSTALLATION.
L8	COORDINATE INSTALLATION OF LIGHTS IN SPACE WITH MONOFLEX INTEGRATED CEILING SYSTEM.
P6	PROVIDE 120V POWER TO THE MOTORIZED DUAL SHADES. RUN WIRING AND MAKE FINAL CONNECTIONS TO CONTROL SWITCH PROVIDED BY OTHERS. INSTALL PER MANUFACTURER'S INSTRUCTIONS.

GENERAL LIGHTING NOTES

A. RUN A SEPARATE UNSWITCHED HOT CONDUCTOR TO ALL EXIT AND EMERGENCY LIGHT FIXTURES.
B. AREAS SHOWING OCCUPANCY/VACANCY SENSORS IDENTIFY SPACES WHERE THE LIGHTS IN THE SPACE ARE TO BE CONTROLLED BY OCCUPANCY/VACANCY SENSORS AND DO NOT NECESSARILY INDICATE EXACT QUANTITIES AND PLACEMENT. THE CONTRACTOR IS TO COORDINATE WITH THE LOCAL MANUFACTURER'S REPRESENTATIVE FOR EXACT LOCATIONS AND QUANTITIES FOR A 90% MINIMUM COVERAGE OF THE SPACE. PROVIDE RELAYS, POWER PACKS, ETC. AS REQUIRED FOR A COMPLETE INSTALLATION. MOTION DETECTION FROM ANY SINGLE DEVICE SHALL TRIGGER ALL THE LIGHTS ON UNLESS INDICATED OTHERWISE.
C. RUN ALL LIGHTING IN SPACES NOT CONTROLLED BY OCCUPANCY SENSORS OR TIMERS THROUGH THE LIGHTING CONTROL PANEL.
D. LIGHTING CALLOUTS ARE TYPICAL FOR OTHER LIGHTS IN THE ROOM OF THE SAME LUMINAIRE SYMBOL UNLESS INDICATED OTHERWISE.
E. FIXTURES/DEVICES/EQUIPMENT SHOWN IN GRAY ARE EXISTING TO REMAIN UNLESS INDICATED OTHERWISE.
F. INSTALLATION SHALL MEET NEC 517 REQUIREMENTS.

FFKR ARCHITECTS
730 Pacific Avenue • Salt Lake City, Utah 84104
801.521.5186 • FFKR.COM

Utah Fertility Center Outpatient Surgery Facility
1365 W Pleasant Grove Blvd, Pleasant Grove, UT 84062
UTAH FERTILITY CENTER
CONSTRUCTION DOCUMENTS - 12.MAR.2021

△ DATE REVISION

PROJECT NUMBER 20087

LIGHTING PLAN

EL101

VBFA
101 East 5600 South
Murray, Utah 84107
O: (801) 530-3148
F: (801) 530-3150
www.vbfa.com
vbfa project #: 20405

3/12/2021 2:01:50 PM

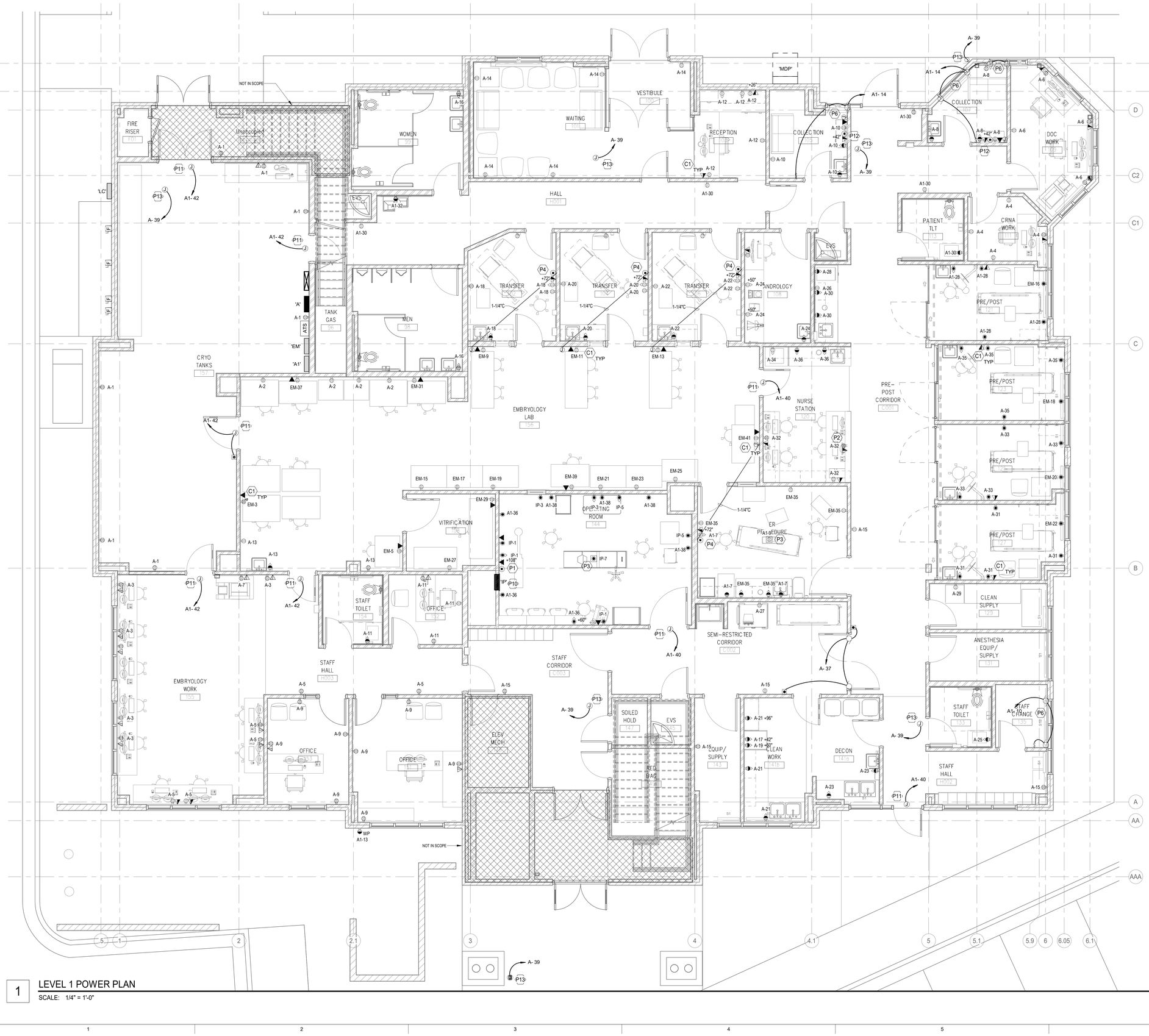

1 LEVEL 1 POWER PLAN

SCALE: 1/4" = 1'-0"

SHEET KEYNOTES

C1	FURNISH AND INSTALL A 4"X4"X2-3/8" J-BOX FOR TELE/DATA OUTLETS. PROVIDE A SINGLE GANG MUD RING AND RUN A 1-1/4" CONDUIT FROM J-BOX TO NEAREST ACCESSIBLE CEILING SPACE. LOCATE J-BOX WITHIN 12" OF DUPLEX OUTLET.
P1	POWER AND DATA FOR MONITORS IN ROOM AT 90" AFF. PROVIDE A 4-GANG RECESSED STEEL TV BOX EQUAL TO ARLINGTON TVBS613 WITH A SURGE-PROTECTIVE RECEPTACLE. RUN A 1-1/4"C WITH PULLSTRING FROM TV BOX TO MICROSCOPE PORT BELOW AND A SEPARATE 1-1/4"C FROM THE TV BOX TO THE NEAREST ACCESSIBLE CEILING SPACE. COORDINATE EXACT HEIGHT AND LOCATION WITH ARCHITECT PRIOR TO ROUGH-IN.
P2	INSTALL DEVICE IN MILLWORK. COORDINATE WITH ARCHITECTURAL DRAWINGS PRIOR TO ROUGH-IN.
P3	PROVIDE A 2-GANG RECESSED FLOOR BOX WITH HINGED METAL COVER FOR POWER. ROUTE 1 1/4" C W/ PULLSTRING FROM FLOOR BOX TO NEAREST WALL AND TERMINATE ABOVE NEAREST ACCESSIBLE CEILING. X-RAY AND CORE DRILL PER SPECIFICATION. COORDINATE WITH BUILDING OWNER PRIOR TO WORK.
P4	POWER AND DATA FOR TWO MONITORS IN ROOM AT 72" AFF. PROVIDE A 4-GANG RECESSED STEEL TV BOX EQUAL TO ARLINGTON TVBS613 WITH A SURGE-PROTECTIVE RECEPTACLE. RUN A 1-1/4"C WITH PULLSTRING FROM TV BOX TO ADACENT LAB HOOD AND A SEPARATE 1-1/4"C FROM THE TV BOX TO THE NEAREST ACCESSIBLE CEILING SPACE. COORDINATE EXACT HEIGHT AND LOCATION WITH ARCHITECT PRIOR TO ROUGH-IN.
P6	PROVIDE 120V POWER TO THE MOTORIZED DUAL SHADES. RUN WIRING AND MAKE FINAL CONNECTIONS TO CONTROL SWITCH PROVIDED BY OTHERS. INSTALL PER MANUFACTURER'S INSTRUCTIONS.
P10	FURNISH AND INSTALL A 5KVA ISOLATION PANEL AT LOCATION SHOWN. RUN XHHW/XHHW-2 CONDUCTORS FOR BRANCH CIRCUITS FROM ISOLATION PANEL.
P11	PROVIDE 120V POWER FOR DOOR. RUN CONDUIT FROM J-BOX TO OFFICE 151. COORDINATE EXACT LOCATION OF HEAD END EQUIPMENT WITH OWNER/ REFER TO ARCHITECTURAL DRAWINGS AND SPECIFICATIONS AND COORDINATE WITH DOOR HARDWARE SHOP DRAWINGS FOR DETAILS.
P12	POWER AND DATA FOR TV IN ROOM AT 42" AFF. PROVIDE A 4-GANG RECESSED STEEL TV BOX EQUAL TO ARLINGTON TVBS613 WITH A SURGE-PROTECTIVE RECEPTACLE. RUN A 1-1/4"C WITH PULLSTRING FROM TV BOX TO MEDIA CABINET BELOW AND A SEPARATE 1-1/4"C FROM THE TV BOX TO THE NEAREST ACCESSIBLE CEILING SPACE. COORDINATE EXACT HEIGHT AND LOCATION WITH ARCHITECT PRIOR TO ROUGH-IN.
P13	POWER FOR WIRELESS SECURITY CAMERA. COORDINATE POWER REQUIREMENTS WITH OWNER PRIOR TO ROUGH-IN.

GENERAL POWER NOTES

A. EC SHALL COORDINATE WITH ALL OTHER TRADES DURING DEMOLITION AND CONSTRUCTION TO FACILITATE TIMELY WORK.
B. ALL AREAS ARE TO BE KEPT CLEAN AND CLEAR OF DEBRIS AT ALL TIMES.
C. CONTRACTOR SHALL PATCH AND REPAIR ALL WALLS, CEILINGS ETC. TO MATCH EXISTING CONDITIONS.
D. ROUTE ALL CONDUIT IN A NEAT AND ORDERLY FASHION. ALL CONDUIT IN FINISHED SPACES SHALL BE CONCEALED ABOVE CEILINGS OR IN WALLS UNLESS OTHERWISE INDICATED ON THE PLANS.
E. PROVIDE CLEAR, TYPED, P-TOUCH LABELS ON THE COVERPLATE OF ALL RECEPTACLES INDICATING THE PANEL AND CIRCUIT NUMBER ITS IS TIED TO.
F. PROVIDE UPDATED TYPED CIRCUIT DIRECTORY WITH UNIQUE CIRCUIT DESCRIPTIONS PER NEC 408.4 FOR PANELS AFFECTED BY THIS PROJECT.
G. FIXTURES/DEVICES/EQUIPMENT SHOWN IN GRAY ARE EXISTING TO REMAIN UNLESS INDICATED OTHERWISE.
H. INSTALLATION SHALL MEET NEC 517 REQUIREMENTS.
I. PROVIDE ANTIMICROBIAL FINISH FOR DEVICES AND FACEPLATES IN OPERATING ROOM.

NORTH

FFKR ARCHITECTS
730 Pacific Avenue • Salt Lake City, Utah 84104
801.521.5186 • FFKRARCH.COM

Utah Fertility Center Outpatient Surgery Facility
1365 W Pleasant Grove Blvd, Pleasant Grove, UT 84062
UTAH FERTILITY CENTER
CONSTRUCTION DOCUMENTS - 12.MAR.2021

REGISTERED PROFESSIONAL ENGINEER
No. 7877350-2202
RYAN C. VAN VOAST
03/12/2021
STATE OF UTAH

△ DATE REVISION

PROJECT NUMBER 20087

POWER PLAN

EP101

VBFA
101 East 5600 South
Murray, Utah 84107
O: (801) 530-3148
F: (801) 530-3150
www.vbfa.com
vbfa project #: 20405

3/12/2021 2:01:51 PM

SHEET KEYNOTES

P7	PROVIDE MANUAL SWITCH TO CONTROL EF-5. WIRE SWITCH IN PARALLEL WITH OXIMETER SO THAT OXIMETER WILL OVER-RIDE ON THE EXHAUST FAN REGARDLESS OF SWITCH POSITION. REFER TO EF-5 SWITCHING DIAGRAM. COORDINATE WORK WITH CONTROLS CONTRACTOR.
P8	PROVIDE POWER FOR HEAT TRACE. COORDINATE WITH MECHANICAL CONTRACTOR.
P9	POWER FOR VAV BOXES. COORDINATE LOCATION WITH CONTROLS CONTRACTOR.

GENERAL POWER NOTES

A. EC SHALL COORDINATE WITH ALL OTHER TRADES DURING DEMOLITION AND CONSTRUCTION TO FACILITATE TIMELY WORK.
B. ALL AREAS ARE TO BE KEPT CLEAN AND CLEAR OF DEBRIS AT ALL TIMES.
C. CONTRACTOR SHALL PATCH AND REPAIR ALL WALLS, CEILINGS ETC. TO MATCH EXISTING CONDITIONS.
D. ROUTE ALL CONDUIT IN A NEAT AND ORDERLY FASHION. ALL CONDUIT IN FINISHED SPACES SHALL BE CONCEALED ABOVE CEILINGS OR IN WALLS UNLESS OTHERWISE INDICATED ON THE PLANS.
E. PROVIDE CLEAR, TYPED, P-TOUCH LABELS ON THE COVERPLATE OF ALL RECEPTACLES INDICATING THE PANEL AND CIRCUIT NUMBER ITS IS TIED TO.
F. PROVIDE UPDATED TYPED CIRCUIT DIRECTORY WITH UNIQUE CIRCUIT DESCRIPTIONS PER NEC 408.4 FOR PANELS AFFECTED BY THIS PROJECT.
G. FIXTURES/DEVICES/EQUIPMENT SHOWN IN GRAY ARE EXISTING TO REMAIN UNLESS INDICATED OTHERWISE.
H. INSTALLATION SHALL MEET NEC 517 REQUIREMENTS.
I. PROVIDE ANTIMICROBIAL FINISH FOR DEVICES AND FACEPLATES IN OPERATING ROOM.

1 LEVEL 1 MECHANICAL POWER PLAN
SCALE: 1/4" = 1'-0"

NORTH

FFKR ARCHITECTS
730 Pacific Avenue • Salt Lake City, Utah 84104
801.521.6186 • FFKRARCH.COM

Utah Fertility Center Outpatient Surgery Facility
1365 W Pleasant Grove Blvd, Pleasant Grove, UT 84062
UTAH FERTILITY CENTER
CONSTRUCTION DOCUMENTS - 12.MAR.2021

REGISTERED PROFESSIONAL ENGINEER No. 787750-2202 RYAN C. VAN VOAST 03/12/2021 STATE OF UTAH

△ DATE REVISION

PROJECT NUMBER 20087

MECHANICAL POWER PLAN

EP102

VBFA
181 East 5600 South
Murray, Utah 84107
O: (801) 530-3148
F: (801) 530-3150
www.vbfa.com
vbfa project #: 20405

3/12/2021 2:01:53 PM

GENERAL POWER NOTES

A. EC SHALL COORDINATE WITH ALL OTHER TRADES DURING DEMOLITION AND CONSTRUCTION TO FACILITATE TIMELY WORK.
B. ALL AREAS ARE TO BE KEPT CLEAN AND CLEAR OF DEBRIS AT ALL TIMES.
C. CONTRACTOR SHALL PATCH AND REPAIR ALL WALLS, CEILINGS ETC. TO MATCH EXISTING CONDITIONS.
D. ROUTE ALL CONDUIT IN A NEAT AND ORDERLY FASHION. ALL CONDUIT IN FINISHED SPACES SHALL BE CONCEALED ABOVE CEILINGS OR IN WALLS UNLESS OTHERWISE INDICATED ON THE PLANS.
E. PROVIDE CLEAR, TYPED, P-TOUCH LABELS ON THE COVERPLATE OF ALL RECEPTACLES INDICATING THE PANEL AND CIRCUIT NUMBER ITS IS TIED TO.
F. PROVIDE UPDATED TYPED CIRCUIT DIRECTORY WITH UNIQUE CIRCUIT DESCRIPTIONS PER NEC 408.4 FOR PANELS AFFECTED BY THIS PROJECT.
G. FIXTURES/DEVICES/EQUIPMENT SHOWN IN GRAY ARE EXISTING TO REMAIN UNLESS INDICATED OTHERWISE.
H. INSTALLATION SHALL MEET NEC 517 REQUIREMENTS.
I. PROVIDE ANTIMICROBIAL FINISH FOR DEVICES AND FACEPLATES IN OPERATING ROOM.

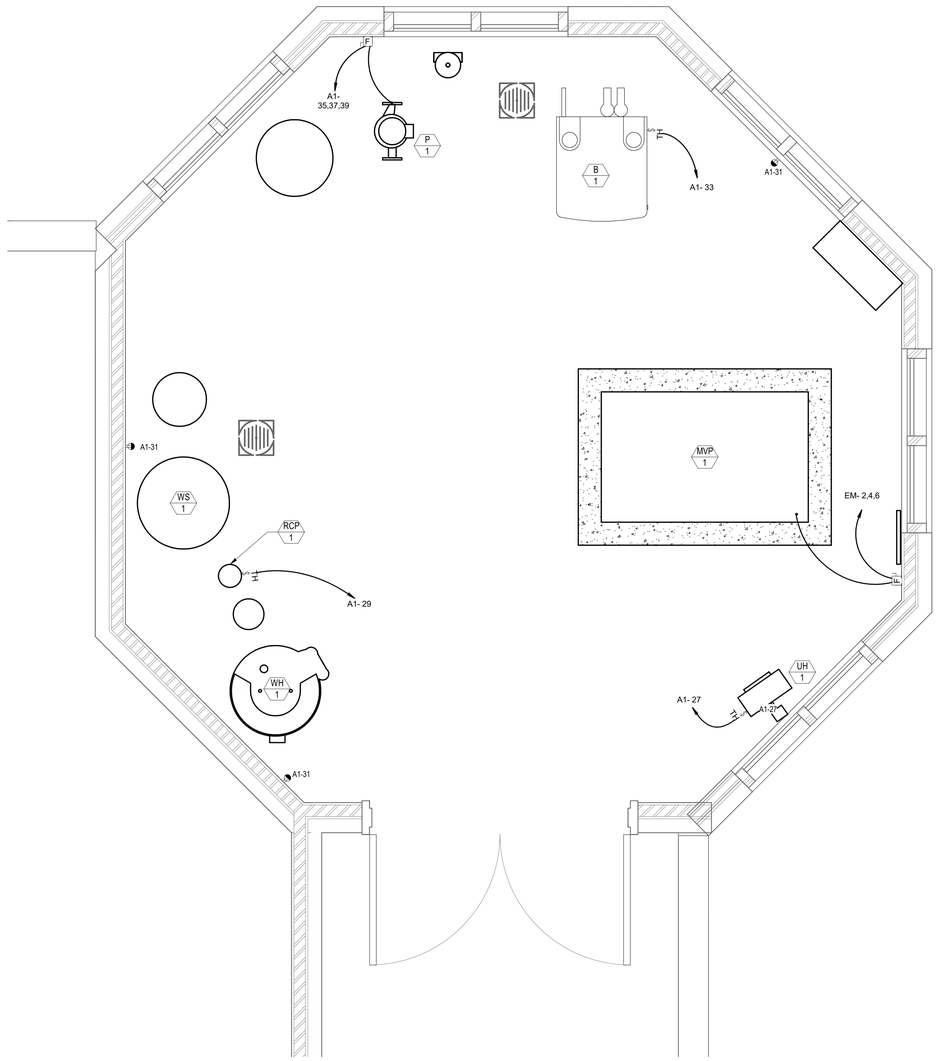

1 ROOF POWER PLAN

SCALE: 3/4" = 1'-0"

FFKR ARCHITECTS
730 Pacific Avenue • Salt Lake City, Utah 84104
801.521.6186 • FFKR.com

Utah Fertility Center Outpatient Surgery Facility
1365 W Pleasant Grove Blvd, Pleasant Grove, UT 84062
UTAH FERTILITY CENTER
CONSTRUCTION DOCUMENTS - 12.MAR.2021

REGISTERED PROFESSIONAL ENGINEER
No. 7877350-2202
RYAN C. VAN VOAST
03/12/2021
STATE OF UTAH

△ DATE REVISION

PROJECT NUMBER 20087

ROOF POWER PLAN

EP103

VBFA
181 East 5600 South
Murray, Utah 84107
O: (801) 530-3148
F: (801) 530-3150
www.vbfa.com
vbfa project #: 20405

3/12/2021 2:01:54 PM

SHEET KEYNOTES

C2	FURNISH AND INSTALL NURSE CALL DEVICE. PROVIDE WIRING AND CABLES REQUIRED FOR A COMPLETE WORKING SYSTEM.
FA1	FURNISH AND INSTALL FIRE ALARM DEVICE AS SHOWN COMPATIBLE WITH THE EXISTING SYSTEM. UTILIZE EXISTING CLASS LOOP. TEST AND CERTIFY UPON COMPLETION.
SE1	PROVIDE 120V POWER FOR CARD ACCESS DEVICES AT DOOR INDICATED.

GENERAL SYSTEMS NOTES

A. COORDINATE FIRE ALARM DEVICES WITH LIGHTING FIXTURES, SPEAKERS, MECHANICAL DIFFUSERS, ETC.
B. CONTRACTOR TO MARK PROVISIONS TO MEET THE INTELLIGIBILITY REQUIREMENTS OF NFPA 72 AND TEST AS REQUIRED BY THE LOCAL AUTHORITY HAVING JURISDICTION.
C. PROVIDE A COMPLETE CODE COMPLIANT FIRE ALARM SYSTEM APPROVED BY THE AUTHORITY HAVING JURISDICTION.
D. FIXTURES/DEVICES/EQUIPMENT SHOWN IN GRAY ARE EXISTING TO REMAIN UNLESS INDICATED OTHERWISE.
E. INSTALLATION SHALL MEET NEC 517 REQUIREMENTS.

1 LEVEL 1 SYSTEMS PLAN
SCALE: 1/4" = 1'-0"

NORTH

FFKR ARCHITECTS
730 Pacific Avenue • Salt Lake City, Utah 84104
O 801.521.5186 • FFKR.COM

Utah Fertility Center Outpatient Surgery Facility
1365 W Pleasant Grove Blvd, Pleasant Grove, UT 84062
UTAH FERTILITY CENTER
CONSTRUCTION DOCUMENTS - 12.MAR.2021

LICENSED ARCHITECT
No. 7877360-2202
RYAN C. VAN VOAST
03/12/2021
STATE OF UTAH

△ DATE REVISION

PROJECT NUMBER 20087

SYSTEMS PLAN

EY101

VBFA
181 East 5600 South
Murray, Utah 84107
O: (801) 530-3148
F: (801) 530-3150
www.vbfa.com
vbfa project #: 20405

3/12/2021 2:01:56 PM