[STAMP] [LOGO]

OWNER
University of Utah

CONTACT: Christin Robbins, Proj. Mngr. E-MAIL: christin.robbins@utah.edu
PHONE: INTERNET: utah.edu

ARCHITECT
Architectural NEXUS, Inc.
2505 East Parleys Way
Salt Lake City, UT 84109

CONTACT: Doug Thimm E-MAIL: dthimm@archnexus.com
PHONE: 801.924.5000 INTERNET: http://www.archnexus.com

ELECTRICAL ENGINEER
Spectrum Engineers
Salt Lake City, UT

CONTACT: Tyler Squire, PE E-MAIL: tds@spectrum-engineers.com
PHONE: 801.401.8472 INTERNET: spectrum-engineers.com

MECHANICAL ENGINEER
Spectrum Engineers
Salt Lake City, UT

CONTACT: Ryan Boogaard, PE E-MAIL: rhb@spectrum-engineers.com
PHONE: 801.401.8420 INTERNET: spectrum-engineers.com

STRUCTURAL
Spectrum Engineers
Salt Lake City, UT

CONTACT: Dave Wesemann, PE E-MAIL: dew@spectrum-engineers.com
PHONE: 801.401.8400 INTERNET: spectrum-engineers.com

5/20/2021 2:59:09 PM

UNIVERSITY OF UTAH

WILLIAMS BLDG TIER 3 NETWORK NODE INTERFACE REMODEL

UNIVERSITY OF UTAH
RESEARCH PARK,
CHIPETA WAY
SALT LAKE CITY, UT

Nexus Project #: 20101 Owner Project #: 22329

04.13.21

PERMIT SET

APPROVALS

Signer 1 Date

Signer 2 Date

Signer 3 Date

Signer 4 Date

ARCH | NEXUS

ARCH | NEXUS
Architectural NEXUS, Inc.
2505 East Parleys Way
Salt Lake City, UT 84109
T 801.924.5000
http://www.archnexus.com

Original drawings remain the property of the Architect and as such the Architect retains total ownership and control. The design represented by these drawings is sold to the client for a one time use, unless otherwise agreed upon in writing by the Architect.
© Architectural Nexus, Inc. 2019

LICENSED ARCHITECT
April 13, 2021
JOHN L HOLBROOK
11144277-0301
STATE OF UTAH

UNIVERSITY OF UTAH
WILLIAMS BLDG TIER 3 NETWORK NODE INTERFACE REMODEL
UNIVERSITY OF UTAH RESEARCH PARK, CHIPETA WAY SALT LAKE CITY, UT

Date Revision

PERMIT SET

NEXUS PROJECT #: 20101
CHECKED BY: Checker
DRAWN BY: Author
DATE: 04.13.21

AGENCY APPROVAL

COVER SHEET

G001

LIST OF ABBREVIATIONS

A	
A/C	AIR CONDITIONING
AD	AREA DRAIN
AFC	ABOVE FINISHED CEILING
AFF	ABOVE FINISHED FLOOR
AHU	AIR HANDLING UNIT
ALUM	ALUMINUM
ANOD	ANODIZED
ARCH	ARCHITECT
@	AT
B	
BD	BOARD
BLDG	BUILDING
BO	BOTTOM OF
C	
C	CELSIUS
CCSPF	CLOSED-CELL SPRAY-APPLIED FOAM INSULATION
CH	COAT HOOK
CFCI	CONTRACTOR FURNISHED, CONTRACTOR INSTALLED
CG	CORNER GUARD
CI	CONTINUOUS INSULATION
CJ	CONTROL JOINT
CL	CENTERLINE
CLG	CEILING
CLO	CLOSET
CLR	CLEAR
CMU	CONCRETE MASONRY UNIT
COL	COLUMN
CONC	CONCRETE
CONT	CONTINUOUS
CORR	CORRIDOR
CT	CERAMIC TILE
CTJ	CONSTRUCTION JOINT
CUH	CABINET UNIT HEATER
D	
D	DEEP
DEG	DEGREE
DEMO	DEMOLITION
DF	DRINKING FOUNTAIN
DIA	DIAMETER
DIM	DIMENSION
DN	DOWN
DS	DOWNSPOUT
DWGS	DRAWINGS
E	
EA	EACH
EJ	EXPANSION JOINT
EIFS	EXTERIOR INSULATION AND FINISH SYSTEM
EL	ELEVATION
ELEC	ELECTRICAL
ELEV	ELEVATOR
EOS	EDGE OF SLAB
ERD	EXISTING ROOF DRAIN
EQ	EQUAL
EQUIP	EQUIPMENT
EWC	ELECTRIC WATER COOLER
EXIST	EXISTING
EXP	EXPOSED
EXT	EXTERIOR
F	
F	FAHRENHEIT
FA	FIRE ALARM
FACP	FIRE ALARM CONTROL PANEL
FDC	FIRE DEPARTMENT CONNECTION
FD	FLOOR DRAIN
FEC	FIRE EXTINGUISHER CABINET
FE	FIRE EXTINGUISHER
FG	FINISH GRADE
FHC	FIRE HOSE CABINET
FIN	FINISH
FLR	FLOOR
FND	FOUNDATION
FO	FINISHED OPENING
FOC	FACE OF CONCRETE
FOM	FACE OF MASONRY
FOS	FACE OF STUD
FOW	FACE OF WALL
FRG	FIBER REINFORCED GYPSUM
FSP	FIRE STANDPIPE
FT	FEET
G	
GA	GAUGE
GALV	GALVANIZED
GFRC	GLASS-FIBER-REINFORCED CONCRETE
GFRG	GLASS-FIBER-REINFORCED GYPSUM
GL	GLASS
GWB	GYPSUM WALL BOARD
GYP	GYPSUM
H	
H	HIGH
HB	HOSE BIBB
HDR	HEADER
HM	HOLLOW METAL
HPT	HIGH POINT
HR	HOUR
HT	HEIGHT
I	
ID	INSIDE DIAMETER; INSIDE DIMENSION
IN	INCH
INFO	INFORMATION
INT	INTERIOR
J	
JAN	JANITOR
K	
	(NOT USED)
L	
LAB	LABORATORY
LAV	LAVATORY
LBS	POUNDS
LLH	LONG LEG HORIZONTAL
LLV	LONG LEG VERTICAL
LPT	LOW POINT
M	
MACH RM	MACHINE ROOM
MAX	MAXIMUM
MFR	MANUFACTURER
MECH	MECHANICAL
MEZZ	MEZZANINE
MIN	MINIMUM
MO	MASONRY OPENING
N	
N/A	NOT APPLICABLE
NIC	NOT IN CONTRACT
NOM	NOMINAL
NTS	NOT TO SCALE
O	
OC	ON CENTER
OD	OUTSIDE DIAMETER; OUTSIDE DIMENSION
OFD	OVERFLOW DRAIN
OH DR	OVERHEAD DOOR
OPH	OPPOSITE HAND
OPP	OPPOSITE
ORIG	ORIGINAL
P	
P LAM	PLASTIC LAMINATE
PLAS	PLASTER
PLUMB	PLUMBING
PR	PAIR
PSI	POUNDS PER SQUARE INCH
PSF	POUNDS PER SQUARE FOOT
PVC	POLYVINYL CHLORIDE
Q	
QT	QUARRY TILE
R	
R	RISER OR RADIUS
RAD	RADIUS
RCP	REFLECTED CEILING PLAN
RD	ROOF DRAIN
REF	REFRIDGERATOR
REQD	REQUIRED
REV	REVISION
RH	RELATIVE HUMIDITY
RM	ROOM
RO	ROUGH OPENING
RTU	ROOF TOP UNIT
RWL	RAIN WATER LEADER
S	
S	SMOKE DETECTOR
SAM	SELF ADHESIVE MEMBRANE
SCHED	SCHEDULE
SECT	SECTION
SIM	SIMILAR
SPEC	SPECIFICATION
SS	STAINLESS STEEL
STD	STANDARD
STRUCT	STRUCTURAL
T	
T	TREAD
TEL	TELEPHONE
TEMP	TEMPORARY
THK	THICK
TOC	TOP OF CONCRETE
TOM	TOP OF MASONRY
TOP	TOP OF PARAPET
TOS	TOP OF SLAB, TOP OF STEEL
TOW	TOP OF WALL
TYP	TYPICAL
TO	TOP OF
U	
UL	UNDERWRITER'S LABORATORIES
UNO	UNLESS NOTED OTHERWISE
V	
VCT	VINYL COMPOSITE TILE
VERT	VERTICAL
VEST	VESTIBULE
VIF	VERIFY IN FIELD
W	
W/	WITH
W/O	WITHOUT
WD	WOOD
WH	WALL HYDRANT
WP	WORKING POINT
WRB	WEATHER RESISTIVE BARRIER
X,Y,Z	(NOT USED)

THE PRECEDING LIST OF ABBREVIATIONS IS PRESENTED AS A GENERAL GUIDE AND DOES NOT NECESSARILY SHOW ALL ABBREVIATIONS USED. OTHER GENERALLY ACCEPTED ABBREVIATIONS MAY BE FOUND AMONG THE DRAWINGS - SOME ABBREVIATIONS SHOWN ABOVE MAY NOT BE USED WITHIN THIS DRAWING SET.

DRAWING SYMBOL LEGEND

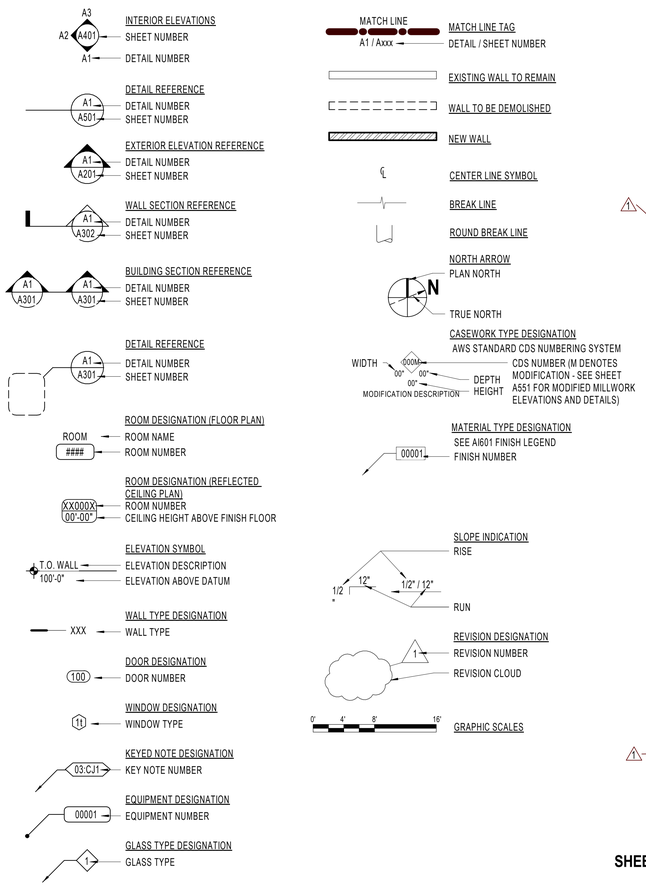

HATCH LEGEND

NOTE: HATCHING ANGLES MAY VARY DUE TO ANGLE OF WALL DRAWN, WHILE HATCHING PATTERN REMAINS SIMILAR.

CAST-IN-PLACE CONCRETE	CONTINUOUS MATERIAL
CONCRETE MASONRY UNIT	NON CONTINUOUS MATERIAL (BLOCKING)
PRECAST CONCRETE / GLASS FIBER REINFORCED CONCRETE (GFRC)	GYPSUM BOARD
STEEL STUDS	PLYWOOD
WOOD STUDS	EXTERIOR SHEATHING
BRICK VENEER	GRAVEL
RIGID INSULATION	UNDISTURBED EARTH
BATT INSULATION	BACKFILL OR FILL

Design Narrative

The University of Utah intends to develop an interface space for a new Tier 3 Network Node relocation within the Williams Building in Research Park. The Williams Building is located at 295 S Chipeta Way SLC, UT 84108. The new space is intended to be designed and constructed to conform to Uptime Institute Tier 3 standards for critical facilities (deviation from Tier 3 standards will be discussed with the Stakeholders as part of the design process).

The Project includes interior renovations and commissioning of the facility. The Network node will house critical network infrastructure only including:

- Routers
- Switches
- Critical network appliances
- DNS and DHCP
- Network time protocol (NTP)
- Firewalls
- Security probes
- Fiber optic entry cabling
- Fiber distribution/cross connects (EMF, FTU, etc.)
- Fiber optic cable splices

The primary considerations for the facility are establishing within the Williams Building a hardened network node facility are space, utility power and backup power and cooling for the facility. There is no heating for these facilities. There is need for sufficient equipment "swing space" for future upgrades. Utility power and backup is required for critical facility.

Base Building Systems

The Network Node facility is to be located at Level 01 of the Williams Building. The work will include improvements for approximately 1,550 sf of building area including common circulation space. The enclosed area of the Network Node will occupy approximately 1,220 sf of secured locked off space. The intention of the design is to create an enclosed Server Room that is divided from the rest of the building with one-hour rated fire walls and 45-minute rated doors. Prior to commencement of this work, the existing Halon fire suppression system will be removed in its entirety.

The architectural improvements are to include the following:

- Maintaining of existing 18" raised computer room floor, with appropriate inspection and replacement of deficient access floor tiles. (Reuse of this system will require structural verification of any seismic design and gravity loading requirements.)
- The existing Storage Room and the existing Halon tank Storage Room are to be reconfigured into A-Side and B-Side UPS rooms with all raised floor areas being removed.
- The spaces are to be defined with full-height one-hour fire rated partitions.
- The existing acoustic tile ceiling is to be removed and a new acoustic tile ceiling will be installed with a nominal ceiling height above the access floor of 10'.
- The common area corridor and ramp are to be maintained and access into the space is to be provided at the 18" raised floor elevation.
- The design will include ADA accessibility requirements.

The building systems are to include the following:

- Power - Redundant power in addition to utility power in the form of utilizing two existing onsite generators. A separate path for generator power is to be maintained from the generators into the Network Node allowing for concurrent operation during generator system maintenance.
- Cooling – Redundant cooling will be provided in the form of chilled water from the existing Williams Building Central Plant and a DX system including the installation of new condensers at an exterior location made available for the project allowing for concurrent operation during cooling system maintenance.
- Fire Suppression – A dry pre-action fire suppression system will be provided.
- A hyper-sensitive products of combustion VESDA system will be provided through-out the Server Room environment.

DESIGN CRITERIA

APPLICABLE CODES

ACCESSIBILITY CODE	ICC/ANSI A117.1-2009
INTERNATIONAL BUILDING CODE	2018 EDITION
INTERNATIONAL ENERGY CONSERVATION CODE	2018 EDITION
INTERNATIONAL FIRE CODE	2018 EDITION
INTERNATIONAL MECHANICAL CODE	2018 EDITION
INTERNATIONAL PLUMBING CODE	2018 EDITION
NATIONAL ELECTRICAL CODE	2017 EDITION
ZONING ORDINANCE: SALT LAKE CITY	Zoning Ordinance

OTHER CRITERIA

DEFERRED SUBMITTALS

SHEET INDEX

GENERAL:

G001	COVER SHEET
G002	GENERAL INFORMATION
G501	ASSEMBLY TYPES
G601	GENERAL CODE REQUIREMENTS
G701	ACCESSIBILITY COMPLIANCE

ARCHITECTURAL:

A101	FLOOR PLAN
A121	ROOF PLAN
A151	REFLECTED CEILING PLAN
A301	ROOM SECTIONS
A501	ARCHITECTURAL DETAILS
A601	DOOR SCHEDULES AND TYPES
A701	TYPICAL DETAILS
A702	TYPICAL DETAILS
AI601	ROOM FINISH SCHEDULE

SHEET INDEX

ED101	LEVEL 1 ELECTRICAL DEMOLITION PLAN
EE001	SHEET INDEX, ABBR., AND GEN. NOTES
EE002	SYMBOLS LEGEND
EL101	LEVEL 1 LIGHTING PLAN
EL601	INTERIOR LIGHTING FIXTURE SCHEDULE
EP101	OVERALL LEVEL 1 POWER PLAN
EP401	ENLARGED AREA POWER PLAN
EP402	ENLARGED DATA ROOM POWER PLAN
EP403	ENLARGED OUTDOOR MECH. ENCLOSURE
EP600	ONE-LINE DIAGRAM SCHEDULES AND NOTES
EP601	ONE-LINE DIAGRAM - EXISTING
EP602	ONE-LINE DIAGRAM - NEW
EP603	EQUIPMENT SCHEDULE
EP604	PANEL SCHEDULES
ET001	TELECOM SCHEDULES AND NOTES
ET100	OVERALL LEVEL 1 TELECOM PLAN
ET101	LEVEL 1 TELECOM PLAN
ET301	ENLARGED SERVER 102 SECTION DETAILS
ET401	ENLARGED SERVER 102 PLANS
ET402	ENLARGED SERVER 102 PLANS
ET501	TELECOM EQUIPMENT RACK ELEVATIONS
ET502	TELECOM EQUIPMENT RACK ELEVATIONS
ET503	TELECOM EQUIPMENT RACK ELEVATIONS
ET504	TELECOM EQUIPMENT RACK ELEVATIONS
ET505	TELECOM DETAILS
ET506	TELECOM EQUIPMENT RACK GROUNDING DETAIL
ET601	TELECOM RISER DIAGRAMS

SHEET INDEX

FA101	LEVEL 1 FIRE ALARM PLAN
FA401	ENALRGED AREA FIRE ALARM PLAN
FA601	FIRE ALARM RISER
FX101	LEVEL 1 FIRE PROTECTION PLAN
FX401	ENLARGED AREA FIRE PROTECTION PLAN
M001	MECHANICAL COVER SHEET
M101	DEMOLITON MECHANICAL PLAN
M201	MECHANICAL PLAN
M211	MECHANICAL ROOF PLAN
M501	MECHANICAL DETAILS
M601	MECHANICAL SCHEDULES
S001	GSN & SPECIAL INSPECTION & SCHEDULES
S100	BASEMENT DATA FLOOR PLAN
S101	CABLE TRAN PLAN & PARTIAL ROOF PLAN
S500	DETAILS
S501	DETAILS
S502	DETAILS
S503	DETAILS

AGENCY APPROVAL

ARCH | NEXUS

Architectural NEXUS, Inc.
2505 East Parleys Way
Salt Lake City, UT 84109
T 801.924.5000
http://www.archnexus.com

Original drawings remain the property of the Architect and as such the Architect retains total ownership and control. The design represented by these drawings is sold to the client for a one time use, unless otherwise agreed upon in writing by the Architect.
© Architectural Nexus, Inc. 2019

LICENSED ARCHITECT
April 13, 2021
JOHN L. HOLBROOK
11144277-0301
STATE OF UTAH

UNIVERSITY OF UTAH
WILLIAMS BLDG TIER 3 NETWORK NODE INTERFACE REMODEL
UNIVERSITY OF UTAH RESEARCH PARK, CHIPETA WAY SALT LAKE CITY, UT

#	Date	Revision
1	21.05.21	PERMIT REVIEW COMMENTS

PERMIT SET

NEXUS PROJECT #: 20101
CHECKED BY: Checker
DRAWN BY: JLH
DATE: 04.13.21

GENERAL INFORMATION

G002

5/20/2021 2:59:09 PM

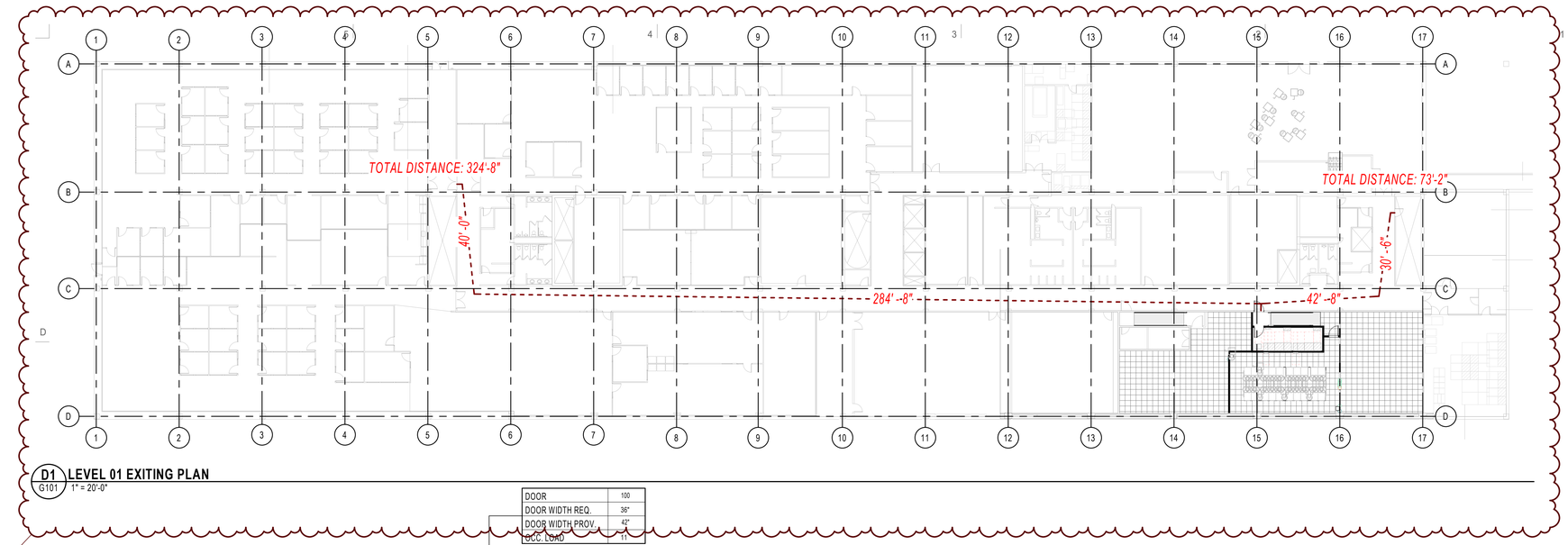

D1 G101 **LEVEL 01 EXITING PLAN**
1" = 20'-0"

WALL RATING LEGEND

- EXISTING WALL - MATCH RATING
- 1 HOUR RATING

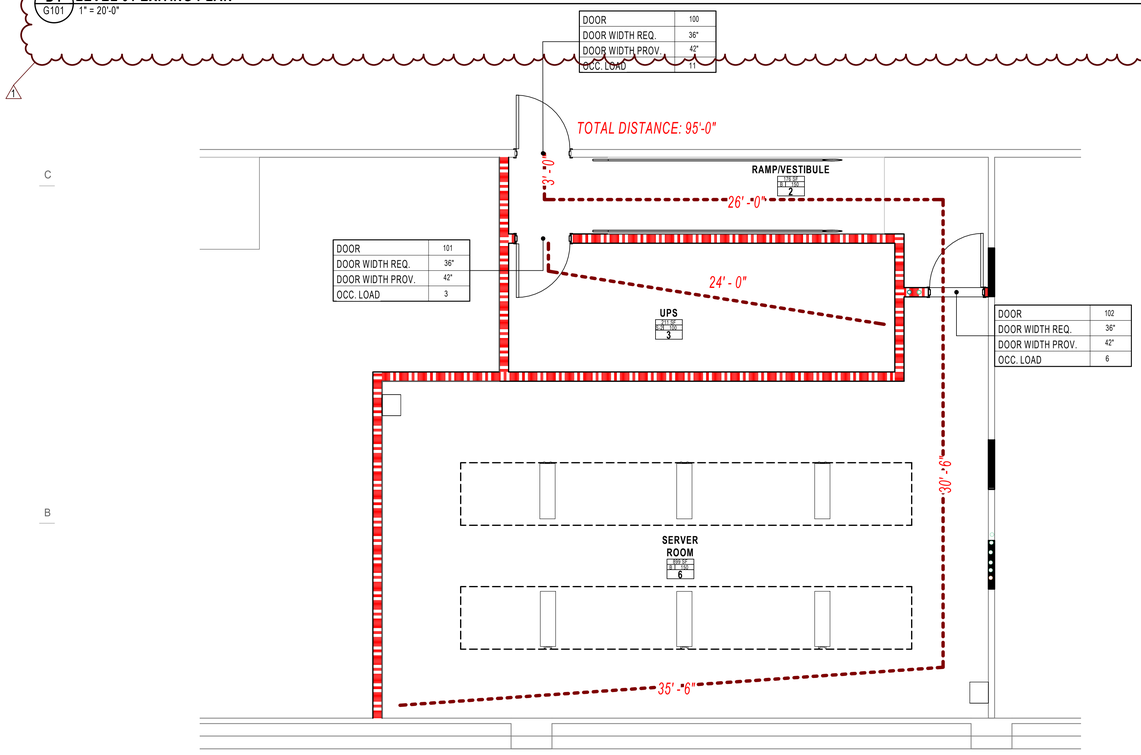

A1 G101 **LEVEL 01 - OCCUPANCY & EXITING PLAN**
1/4" = 1'-0"

5/20/2021 2:59:15 PM

ARCH | NEXUS

Architectural NEXUS, Inc.
2505 East Parleys Way
Salt Lake City, UT 84109
T 801.924.5000
http://www.archnexus.com

Original drawings remain the property of the Architect and as such the Architect retains total ownership and control. The design represented by these drawings is sold to the client for a one time use, unless otherwise agreed upon in writing by the Architect.
© Architectural Nexus, Inc. 2019

LICENSED ARCHITECT
April 13, 2021
JOHN L. HOLBROOK
11144277-0301
STATE OF UTAH

UNIVERSITY OF UTAH
WILLIAMS BLDG TIER 3 NETWORK NODE INTERFACE REMODEL
UNIVERSITY OF UTAH RESEARCH PARK, CHIPETA WAY
SALT LAKE CITY, UT

#	Date	Revision
1	21.05.21	PERMIT REVIEW COMMENTS

PERMIT SET

NEXUS PROJECT #: 20101
CHECKED BY: Checker
DRAWN BY: Author
DATE: 04.13.21

AGENCY APPROVAL

EXITING & OCCUPANCY PLANS

G101

GENERAL NOTE - WALL TYPE

A. ALL NEW INTERIOR WALL ASSEMBLIES ARE CONTINUOUS TO BOTTOM OF DECK UNLESS NOTED OTHERWISE. REFER TO THE LEGENDS ON THIS SHEET AND COORDINATE WITH PLANS.
B. WALL TYPES DESCRIBED ON THIS SHEET DO NOT SHOW OR ACCOUNT FOR REQUIREMENTS WHERE A TILE FINISH OCCURS. WHERE THE FINISH SCHEDULE OR INTERIOR ELEVATIONS CALL FOR TILE, REPLACE GYPSUM BOARD SHOWN IN THAT WALL'S ASSEMBLY WITH 5/8" TILE BACKER BOARD WHERE THE TILE OCCURS. REPLACE OTHER GYPSUM BOARD SHOWN IN THAT WALL'S ASSEMBLY WITH 5/8" MOISTURE RESISTANT GYPSUM BOARD WHERE NO TILE OCCURS.
C. WALL TYPES DESCRIBED ON THIS SHEET DO NOT ACCOUNT FOR REQUIRED BACKING / SUPPORT FOR MOUNTED FIXTURES, EQUIPMENT, CASEWORK, AND/OR SYSTEMS FURNITURE. COORDINATE WITH FLOOR PLANS, AND INTERIOR ELEVATIONS PRIOR TO THE COVERING OF STUD FRAMING. REFER TO MANUFACTURER'S RECOMMENDATIONS AND WHERE APPLICABLE USE DETAIL C1 / A701.
D. REFER TO STRUCTURAL DRAWINGS FOR STRUCTURAL SHEATHING REQUIREMENTS AND ATTACHMENTS.
E. PROVIDE SEISMIC BRACING AT ALL WALL TYPES THAT DO NOT EXTEND TO DECK, PER DETAIL C3 / A701.
F. PENETRATIONS THROUGH FIRE RATED ASSEMBLIES SHALL BE PROVIDED PER SHEET G101.
G. INFORMATION IN THE LEGENDS BELOW IS FOR REFERENCE ONLY AND DOES NOT OVERRIDE THE CONTENTS OF THE DETAILS ON THIS SHEET.

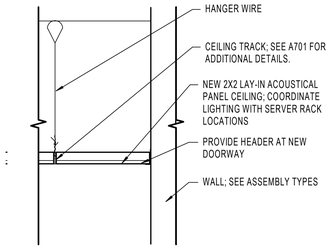

CEILING TYPE: **CT00.32**
FIRE RATING:
FIRE TEST:
SOUND RATING: **TEST:**

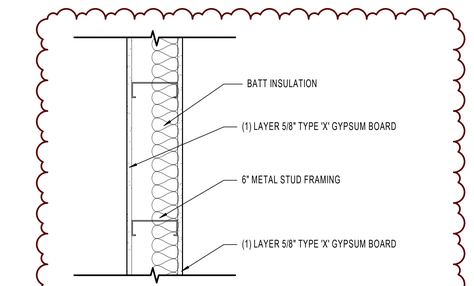

WALL TYPE: **S61A**
FIRE RATING: 1 HOUR
FIRE TEST: UL U419 (NON BEARING)
SOUND RATING: STC 44 **TEST:** *need test info*

WALL TO EXTEND FROM CONCRETE FLOOR TO STRUCTURE (FLOOR DECKING) ABOVE

EXTERIOR WALL TAG LEGEND

-XS#1.1

- PREFIX: 'X' FOR EXTERIOR CORE WALL
- CONSTRUCTION TYPE (SEE BELOW)
- STRUCTURE THICKNESS (TO NEAREST SIZE)
- FIRE RATING (AS NEEDED, SEE BELOW)
- TYPE (AS NEEDED)

CONSTRUCTION TYPES		FIRE RATING	
CONCRETE	C	1 HOUR	1
MASONRY	M	2 HOUR	2
STEEL STUDS	S	3 HOUR	3
C-H (SHAFTWALL) STUD	SS	4 HOUR	4
WOOD STUDS	W	NO RATING	NOT SHOWN

INTERIOR WALL TAG LEGEND

-S61M-C

- CONSTRUCTION TYPE (SEE BELOW)
- STRUCTURE THICKNESS (TO NEAREST SIZE)
- FIRE RATING (AS NEEDED, SEE BELOW)
- MODIFIERS (AS NEEDED, SEE BELOW)
- TOP OF WALL CONDITION, IF NOT TO DECK (AS NEEDED, SEE BELOW)

CONSTRUCTION TYPES		FIRE RATING	
CONCRETE	**C**	0 HOUR (SMOKE)	**0**
MASONRY	**M**	1 HOUR	**1**
STEEL STUDS	**S**	2 HOUR	**2**
C-H (SHAFTWALL) STUD	**H**	3 HOUR	**3**
WOOD STUDS	**W**	4 HOUR	**4**
DOUBLE STUD	**#D**	NO RATING	**NOT SHOWN**

MODIFIER EXAMPLES		TOP OF WALL CONDITIONS
ACOUSTIC RATING	**A**	SEE TABLE BELOW
FURRING	**F**	
GYP. ONE SIDE	**G**	
LEAD SHEILDING	**L**	
RF SHEILDING	**R**	
MAGNETIC SHEILDING	**M**	

TOP OF WALL CONDITIONS — EXAMPLE

-U = UNDERSIDE / BOTTOM OF CEILING
WALL EXTENDS TO UNDERSIDE OF CEILING. TERMINATE WITH "J" MOULD AT GYP. BOARD WALLS.

-C = 6" ABOVE CEILING
WALLS WILL TERMINATE AT 6" ABOVE THE HIGHEST ADJOINING CEILING (UNLESS OTHERWISE NOTED) TERMINATE 1 FULL COURSE ABOVE FOR MASONRY WALLS.

-H = PARTIAL HEIGHT
REFER TO DRAWINGS FOR TOP OF WALL ELEVATION

-N = NO SIDES TO STRUCTURE
WALLS WILL TERMINATE AT 6" ABOVE HIGHEST ADJOINING CEILING (UNLESS OTHERWISE NOTED) TERMINATE 1 FULL COURSE ABOVE FOR MASONRY WALLS.

-S = ONE SIDE TO STRUCTURE
WALL WILL TERMINATE TO BOTTOM OF DECK ON ONE SIDE AND THE OTHER SIDE SHALL TERMINATE AT 6" ABOVE HIGHEST ADJOINING CEILING (UNLESS OTHERWISE NOTED). TERMINATE 1 FULL COURSE ABOVE FOR MASONRY WALLS.

AGENCY APPROVAL

ARCH | NEXUS
Architectural NEXUS, Inc.
2505 East Parleys Way
Salt Lake City, UT 84109
T 801.924.5000
http://www.archnexus.com

Original drawings remain the property of the Architect and as such the Architect retains total ownership and control. The design represented by these drawings is sold to the client for a one time use, unless otherwise agreed upon in writing by the Architect.
© Architectural Nexus, Inc. 2019

LICENSED ARCHITECT
April 13, 2021
JOHN L HOLBROOK
11144277-0301
STATE OF UTAH

UNIVERSITY OF UTAH
WILLIAMS BLDG TIER 3 NETWORK NODE INTERFACE REMODEL
UNIVERSITY OF UTAH RESEARCH PARK, CHIPETA WAY
SALT LAKE CITY, UT

#	Date	Revision
1	21.05.21	PERMIT REVIEW COMMENTS

PERMIT SET

NEXUS PROJECT #: 20101
CHECKED BY: Checker
DRAWN BY: Author
DATE: 04.13.21

ASSEMBLY TYPES

G501

5/20/2021 2:59:17 PM

CODE ANALYSIS TABLE

BUILDING IDENTIFICATION:

ARCH NEXUS PROJECT # 20101 - WILLIAMS BUILDING TIER 3 NETWORK NODE INTERFACE REMODEL

CODE ANALYSIS COMPLETION DATE:

2021 / 04 / 06

PROJECT SCOPE:

REMODEL

PART 1

APPLICABLE CODES	YEAR	APPLICABLE CODES	YEAR
INTERNATIONAL BUILDING CODE (IBC)	2018	ADA (ADAAG)	2010
INTERNATIONAL EXISTING BUILDING CODE (IEBC)	2018	ICC/ANSI A117.1	2009
INTERNATIONAL FIRE CODE (IFC)	2018	NFPA 101 LIFE SAFETY CODE (STATE)	2018
INTERNATIONAL MECHANICAL CODE (IMC)	2018	NFPA 101 LIFE SAFETY CODE (FEDERAL)	2012
INTERNATIONAL ENERGY CONSERVATION CODE (IECC)	2018	NFPA 99 HEALTH CARE FACILITIES CODE	2012
INTERNATIONAL PLUMBING CODE (IPC)	2018	FGI HEALTH CARE GUIDELINES	2010
NATIONAL ELECTRIC CODE	2017	UTAH CODE TITLE 15-A	CURRENT

PART 2

OCCUPANCY GROUP (CHAPTER 03)		(T601) CONST TYPE (*1)	AREA (506)				HEIGHT (T504.3) *6		STORIES (T504.4) *6		(508) MIXED USE TYPE (*3)	(508.4.2) AREA RATIO
NAME	GROUP		TABULAR NS (T506.2)	TABULAR SM or S1 (T506.2)	Aa (*2)	ACTUAL ft^2.	TABULAR (T504.3) ft.	ACTUAL ft.	TABULAR (T504.4)	ACTUAL		
--	--	--	--	--	--	--	--		--	--	--	--
SERVER ROOM	B	IIB	UL	UL	UL	899	N/A	N/A	N/A		N/A	
UPS ROOM	S-2	IIB	UL	316,000	UL	211						
BUILDING TOTAL (*2)						1,110		--		--		

(*1) Construction Type shall be the most restrictive occupancy requirement for the entire building (508.3 & 508.4)
(*2) Area- Total building Area dependent on Single or Mixed Occupancy Building (506.2.1 through 506.2.4) & Frontage Increase (506.3)
(*3) Mixed Use - **IAO**=Incidental Accessory Occupancy / **AO**=Accessory Occupancy / **SO**=Separated Occupancies / **NSO**=Nonseparated Occupancies;
gsf= gross square feet; **nsf**= net square feet; **(E)** = Existing
(*4) IBC Section 508.4.2: In each story, the building area shall be such that the sum of the ratios of the actual building area of each separated occupancy divided by the allowable building area of each separated occupancy shall not exceed 1.
(*5) 506.2.4 Mixed-occupancy, multistory buildings more than 3 stories above grade plan: Total building area shall be such that the aggregate sum of the ratios of the actual area of each story divided by the allowable area of such stories shall not exceed three for NS and four for S.
(*6) IBC 504.2 Mixed occupancy: In a building containing mixed occupancies in accordance with Section 508, no individual occupancy shall exceed the height and number of story limits specified in this section for the applicable occupancies.

PART 5 - AUTOMATIC FIRE SPRINKLER (903 & T903.2.11.6)

ITEM	REFERENCE	COMMENTS
Required		
Fire-Resistance Substitution	N/A	N/A

PART 6 - OCCUPANCY SEPARATIONS (T508.4) (Modify as needed for additional floors/areas)

OCCUPANCY / OCCUPANCY	RATING	IBC / UL DESIGN #
B/S-2	1HR	UL 419

CODE ANALYSIS TABLE

PART 7 - OTHER BUILDING ELEMENTS (T601 and T602)

BUILDING ELEMENT	CONSTRUCTION TYPE	MATERIAL (602.3)	RATING	IBC / UL DESIGN #
Primary Structural Frame		STRUCTURAL STEEL	1 HOUR	UL N782
Nonbearing Walls and Partitions				
Interior Walls *4		METAL STUD FRAMING	1 HOUR	UL 419

PART 9 - EXIT REQUIREMENTS

ROOM NAME	AREA	OCCUPANT LOAD FACTOR (T1004.1.2)	# OF OCCUPANTS (1004)	# OF EXITS (1006)	REQUIRED EGRESS WIDTH (1005)		COMMON PATH OF TRAVEL DISTANCE (T1006.2.1)	TOTAL TRAVEL DISTANCE (1017)
	--		--		--			
UPS ROOM	211	100	3		36"		75'	24'
SERVER ROOM	899	150	6		36"		100'	66'
BUILDING TOTAL	1,110		9					

PART 12 - DEFERRED SUBMITTALS, NONSTRUCTURAL COMPONENTS CHECKLIST, & SPECIAL INSPECTIONS LIST:

Provide the following information in the Code Analysis, delete nonapplicable sections.

LIST OF DEFERRED SUBMITTALS:

ITEM	DRAWING REFERENCE	SPECIFICATION REFERENCE
Fire Sprinklers	--	--

ARCH | NEXUS

Architectural NEXUS, Inc.
2505 East Parleys Way
Salt Lake City, UT 84109
T 801.924.5000
http://www.archnexus.com

Original drawings remain the property of the Architect and as such the Architect retains total ownership and control. The design represented by these drawings is sold to the client for a one time use, unless otherwise agreed upon in writing by the Architect.
© Architectural Nexus, Inc. 2019

LICENSED ARCHITECT
JOHN L. HOLBROOK
11144277-0301
April 13, 2021
STATE OF UTAH

UNIVERSITY OF UTAH

WILLIAMS BLDG TIER 3 NETWORK NODE INTERFACE REMODEL

UNIVERSITY OF UTAH RESEARCH PARK, CHIPETA WAY SALT LAKE CITY, UT

#	Date	Revision
1	21.05.21	PERMIT REVIEW COMMENTS

PERMIT SET

NEXUS PROJECT #: 20101
CHECKED BY: Checker
DRAWN BY: Author
DATE: 04.13.21

AGENCY APPROVAL

GENERAL CODE REQUIREMENTS

G601

5/20/2021 2:59:20 PM

ARCH | NEXUS

Architectural NEXUS, Inc.
2505 East Parleys Way
Salt Lake City, UT 84109
T 801.924.5000
http://www.archnexus.com

Original drawings remain the property of the Architect and as such the Architect retains total ownership and control. The design represented by these drawings is sold to the client for a one time use, unless otherwise agreed upon in writing by the Architect.
© Architectural Nexus, Inc. 2019

LICENSED ARCHITECT
April 13, 2021
JOHN L HOLBROOK
11144277-0301
STATE OF UTAH

UNIVERSITY OF UTAH
WILLIAMS BLDG TIER 3 NETWORK NODE INTERFACE REMODEL
UNIVERSITY OF UTAH RESEARCH PARK, CHIPETA WAY
SALT LAKE CITY, UT

#	Date	Revision

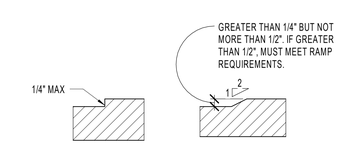

A2 G701 CHANGE IN LEVELS
6" = 1'-0"

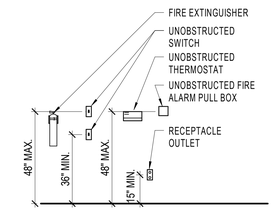

RECEPTACLES AND SWITCH MOUNTING HEIGHTS

A1 G701 MISC. MOUNTING HEIGHTS
3/8" = 1'-0"

GENERAL NOTE - ACCESSIBILITY

A. THESE DETAILS ARE SHOWN FOR MINIMUM ACCESSIBILITY REQUIREMENTS. SEE PROJECT SPECIFIC DETAILS FOR ADDITIONAL INFORMATION. VERIFY WITH ARCHITECT ANY DIFFERENCES BEFORE PROCEEDING WITH CONSTRUCTION.

AGENCY APPROVAL

PERMIT SET

NEXUS PROJECT #: 20101
CHECKED BY: Checker
DRAWN BY: Author
DATE: 04.13.21

ACCESSIBILITY COMPLIANCE

G701

5/20/2021 2:59:20 PM

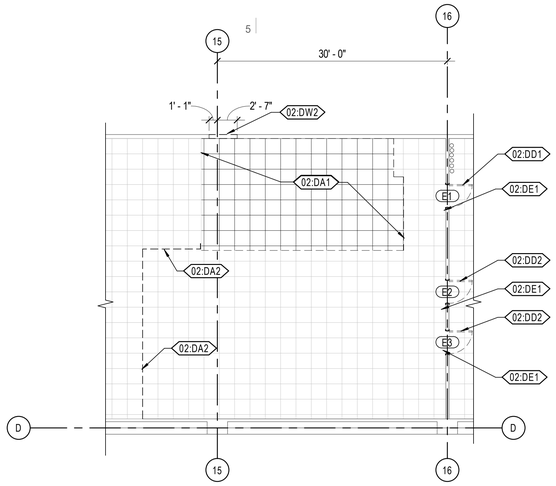

C5 LEVEL 01 - DEMOLITION PLAN
A101 1/8" = 1'-0"

GENERAL NOTE - DEMOLITION PLAN

A. PROTECT WALLS, CEILINGS, FLOORS AND OTHER EXISTING FINISH WORK THAT ARE TO REMAIN OR THAT ARE EXPOSED DURING SELECTIVE DEMOLITION OPERATIONS
B. PATCH AND REPAIR DAMAGE IN WALLS, CEILINGS, AND FLOORS RESULTING FROM DEMOLITION OF EXISTING ITEMS OR CONSTRUCTION OF NEW ITEMS AND/OR REPLACE WITH NEW TO MATCH EXISTING. CLEAN AND PREPARE TO RECEIVE NEW FINISH.
C. PROTECT ADJACENT AREAS FROM DUST AND DEBRIS DURING SELECTIVE DEMOLITION OPERATIONS.
D. TRANSPORT DEMOLISHED MATERIALS OFF OWNER'S PROPERTY AND LEGALLY DISPOSE OF DEBRIS.
E. FIELD VERIFY EXISTING CONDITIONS AND THEIR COMPATIBILITY WITH NEW CONSTRUCTION PRIOR TO THE COMMENCEMENT OF WORK. COORDINATE DISCREPANCIES WITH ARCHITECT.
F. CLEAN ADJACENT IMPROVEMENTS OF DUST, DIRT, AND DEBRIS CAUSE BY SELECTIVE DEMOLITION OPERATIONS. RETURN ADJACENT AREAS TO CONDITION EXISTING BEFORE SELECTIVE DEMOLITION OPERATIONS BEGAN.
G. SEE MECHANICAL, ELECTRICAL, AND AUDIO-VISUAL DRAWINGS FOR ADDITIONAL INFORMATION. COORDINATE DISCREPANCIES WITH ARCHITECT PRIOR TO PROCEEDING WITH WORK.
H. DEMOLITION WORK SHALL NOT OBSTRUCT EXISTING PATHWAYS AND NORMAL OPERATION OF THE BUILDING.

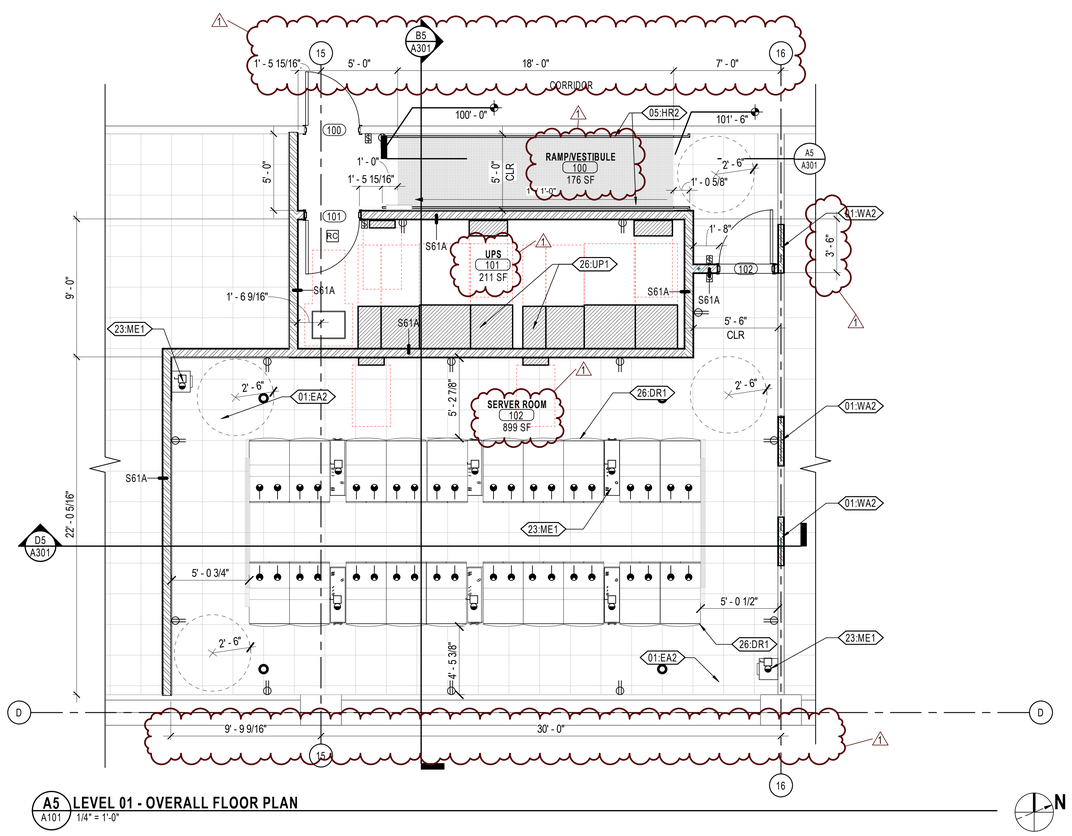

A5 LEVEL 01 - OVERALL FLOOR PLAN
A101 1/4" = 1'-0"

GENERAL NOTE - FLOOR PLAN

A. ALL NEW WALL ASSEMBLIES ARE CONTINUOUS TO BOTTOM OF DECK UNLESS NOTED OTHERWISE.
B. PLAN WALL DIMENSIONS ARE TO GRID LINE OR FACE OF WALL STRUCTURE, UNLESS NOTED OTHERWISE. "CLEAR" DIMENSIONS ARE TO FACE OF WALL FINISH.
C. FIELD VERIFY ALL EXISTING CONDITIONS AND THEIR COMPATIBILITY WITH NEW CONSTRUCTION PRIOR TO THE COMMENCEMENT OF WORK. COORDINATE DISCREPANCIES WITH ARCHITECT.
D. DO NOT SCALE DRAWINGS.
E. SEE MECHANICAL AND ELECTRICAL DRAWINGS FOR MORE INFORMATION.
F. SEE G SERIES SHEETS FOR WALL TYPES AND TYPICAL ACCESSIBILITY CLEARANCE AND COMPLIANCE REQUIREMENTS.
G. PROVIDE BACKING BEHIND ALL SURFACE MOUNTED EQUIPMENT AND/OR FIXTURES PER DETAIL C1 / A701.
H. DIMENSIONAL ADJUSTMENT MAY BE REQUIRED TO LOCATE WALLS TO ALLOW FOR FIELD CONDITIONS AND ALIGNMENT TO FLOOR ACCESS PANELS.
I. CONSTRUCTION WORK SHALL NOT OBSTRUCT EXISTING PATHWAYS AND NORMAL OPERATION OF THE BUILDING.

KEYNOTE LEGEND	
Key Value	Keynote Text
01:EA2	REUSE RAISED ACCESS FLOORING TO INFILL AS NEEDED. PROVIDE RETROFIT BRACING PER MECHANICAL
01:WA2	INFILL OPENING WITH WALL WHERE DOORS HAVE BEEN REMOVED, MATCH EXISTING WALL ASSEMBLY AND RATING.
02:DA1	REMOVE RAISED ACCESS FLOOR PANELS AND SUPPORTS WHERE FULL PANEL JOINTS OCCUR; COORDINATE WITH OWNER FOR STORAGE
02:DA2	MODIFY RAISED ACCESS FLOOR PANELS AND SUPPORTS AS NEEDED TO RESTORE TO FUNCTIONING CONDITIONS. PROVIDE RETROFIT BRACING PER MECHANICAL
02:DD1	REMOVE EXISTING DOORS AND FRAMES. COORDINATE WITH OWNER FOR STORAGE
02:DD2	REMOVE EXISTING DOORS AND FRAMES. COORDINATE RELOCATION WITH OWNER FOR CODE REQUIRED ACCESS TO ADJACENT ROOMS
02:DE1	DEMOLISH EXISTING EQUIPMENT UNDER ACCESS FLOORING
02:DW2	DEMOLISH PORTION OF WALL AND PREPARE FOR NEW OPENING
05:HR2	NEW HAND RAIL
23:ME1	MECHANICAL EQUIPMENT; SEE MECHANICAL
26:DR1	ALIGN FRONT OF DATA RACK TO ACCESS FLOOR PANEL
26:UP1	ELECTRICAL EQUIPMENT, SEE ELECTRICAL

ARCH | NEXUS
Architectural NEXUS, Inc.
2505 East Parleys Way
Salt Lake City, UT 84109
T 801.924.5000
http://www.archnexus.com

Original drawings remain the property of the Architect and as such the Architect retains total ownership and control. The design represented by these drawings is sold to the client for a one time use, unless otherwise agreed upon in writing by the Architect.
© Architectural Nexus, Inc. 2019

LICENSED ARCHITECT
April 13, 2021
JOHN L HOLBROOK
11144277-0301
STATE OF UTAH

UNIVERSITY OF UTAH
WILLIAMS BLDG TIER 3 NETWORK NODE INTERFACE REMODEL
UNIVERSITY OF UTAH RESEARCH PARK, CHIPETA WAY
SALT LAKE CITY, UT

#	Date	Revision
1	21.05.21	PERMIT REVIEW COMMENTS

PERMIT SET

NEXUS PROJECT #: 20101
CHECKED BY: Checker
DRAWN BY: JLH
DATE: 04.13.21

AGENCY APPROVAL

FLOOR PLAN

A101

5/20/2021 2:58:47 PM

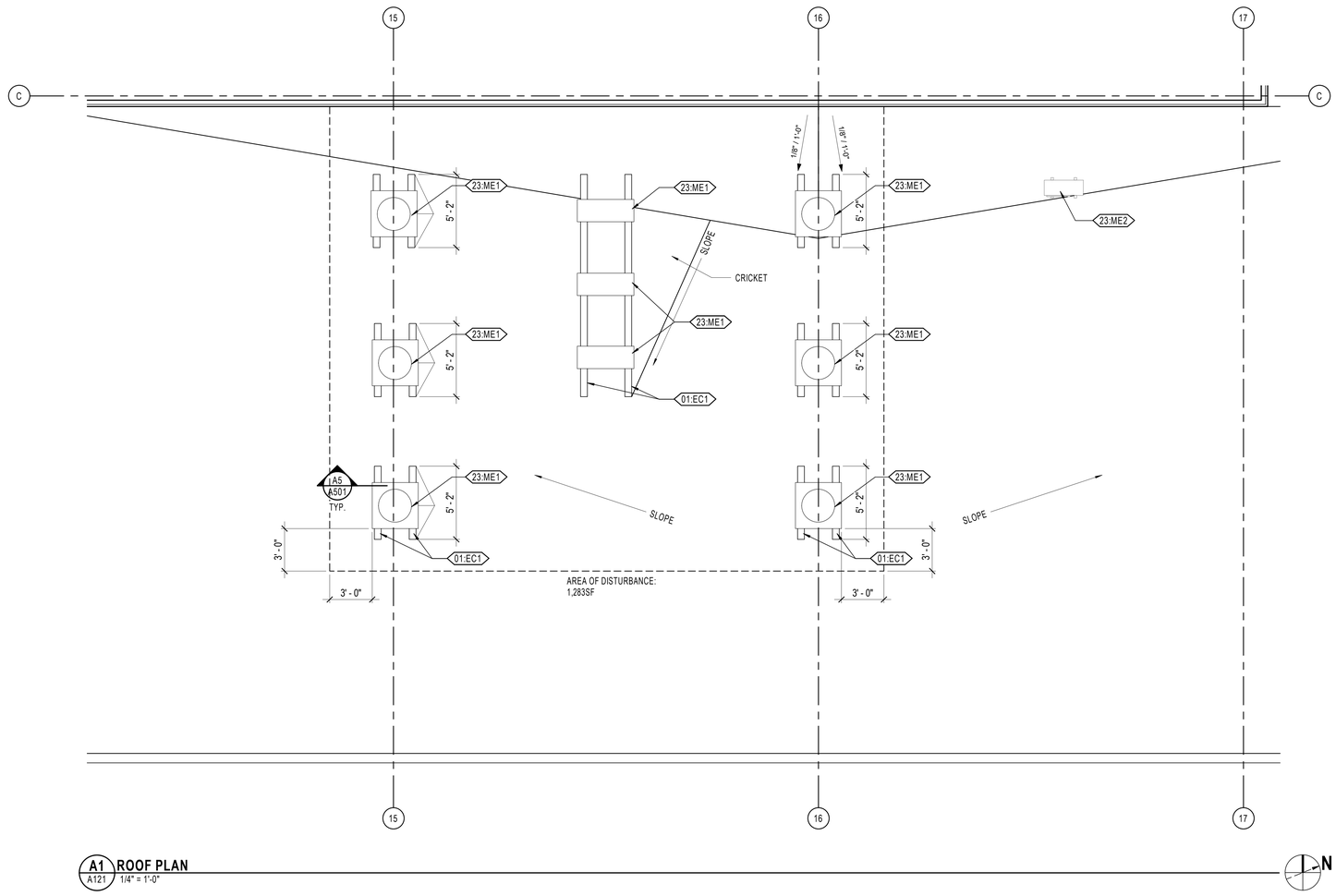

A1 ROOF PLAN
A121 1/4" = 1'-0"

N

GENERAL NOTE - ROOF PLAN

A. COORDINATE ALL ATTACHMENTS OF ROOF SYSTEM WITH MECHANICAL AND ELECTRICAL DRAWINGS.

KEYNOTE LEGEND	
Key Value	Keynote Text
01:EC1	EQUIPMENT ROOF CURB
23:ME1	MECHANICAL EQUIPMENT; SEE MECHANICAL
23:ME2	EXISTING MECHANICAL EQUIPMENT; DO NOT DISTURB

ARCH | NEXUS

Architectural NEXUS, Inc.
2505 East Parleys Way
Salt Lake City, UT 84109
T 801.924.5000
http://www.archnexus.com

Original drawings remain the property of the Architect and as such the Architect retains total ownership and control. The design represented by these drawings is sold to the client for a one time use, unless otherwise agreed upon in writing by the Architect.
© Architectural Nexus, Inc. 2019

LICENSED ARCHITECT
April 13, 2021
JOHN L HOLBROOK
11144277-0301
STATE OF UTAH

UNIVERSITY OF UTAH

WILLIAMS BLDG TIER 3 NETWORK NODE INTERFACE REMODEL

UNIVERSITY OF UTAH RESEARCH PARK,
CHIPETA WAY
SALT LAKE CITY, UT

#	Date	Revision

PERMIT SET

NEXUS PROJECT #: 20101
CHECKED BY: Checker
DRAWN BY: JLH
DATE: 04.13.21

AGENCY APPROVAL

ROOF PLAN

A121

5/20/2021 2:58:49 PM

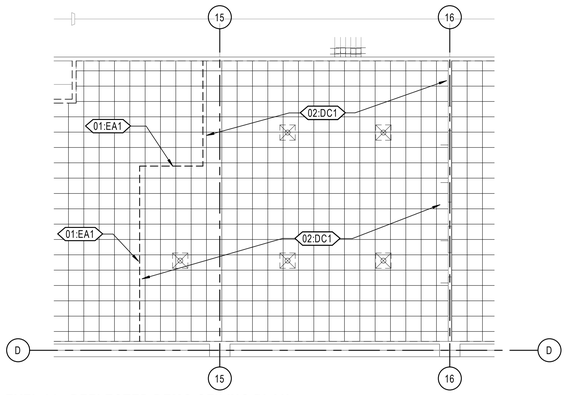

D5 A151 **LEVEL 01 - REFLECTED DEMO CEILING PLAN**
1/8" = 1'-0"

GENERAL NOTE - DEMOLITION PLAN

A. PROTECT WALLS, CEILINGS, FLOORS AND OTHER EXISTING FINISH WORK THAT ARE TO REMAIN OR THAT ARE EXPOSED DURING SELECTIVE DEMOLITION OPERATIONS
B. PATCH AND REPAIR DAMAGE IN WALLS, CEILINGS, AND FLOORS RESULTING FROM DEMOLITION OF EXISTING ITEMS OR CONSTRUCTION OF NEW ITEMS AND/OR REPLACE WITH NEW TO MATCH EXISTING. CLEAN AND PREPARE TO RECEIVE NEW FINISH.
C. PROTECT ADJACENT AREAS FROM DUST AND DEBRIS DURING SELECTIVE DEMOLITION OPERATIONS.
D. TRANSPORT DEMOLISHED MATERIALS OFF OWNER'S PROPERTY AND LEGALLY DISPOSE OF DEBRIS.
E. FIELD VERIFY EXISTING CONDITIONS AND THEIR COMPATIBILITY WITH NEW CONSTRUCTION PRIOR TO THE COMMENCEMENT OF WORK. COORDINATE DISCREPANCIES WITH ARCHITECT.
F. CLEAN ADJACENT IMPROVEMENTS OF DUST, DIRT, AND DEBRIS CAUSE BY SELECTIVE DEMOLITION OPERATIONS. RETURN ADJACENT AREAS TO CONDITION EXISTING BEFORE SELECTIVE DEMOLITION OPERATIONS BEGAN.
G. SEE MECHANICAL, ELECTRICAL, AND AUDIO-VISUAL DRAWINGS FOR ADDITIONAL INFORMATION. COORDINATE DISCREPANCIES WITH ARCHITECT PRIOR TO PROCEEDING WITH WORK.
H. DEMOLITION WORK SHALL NOT OBSTRUCT EXISTING PATHWAYS AND NORMAL OPERATION OF THE BUILDING.

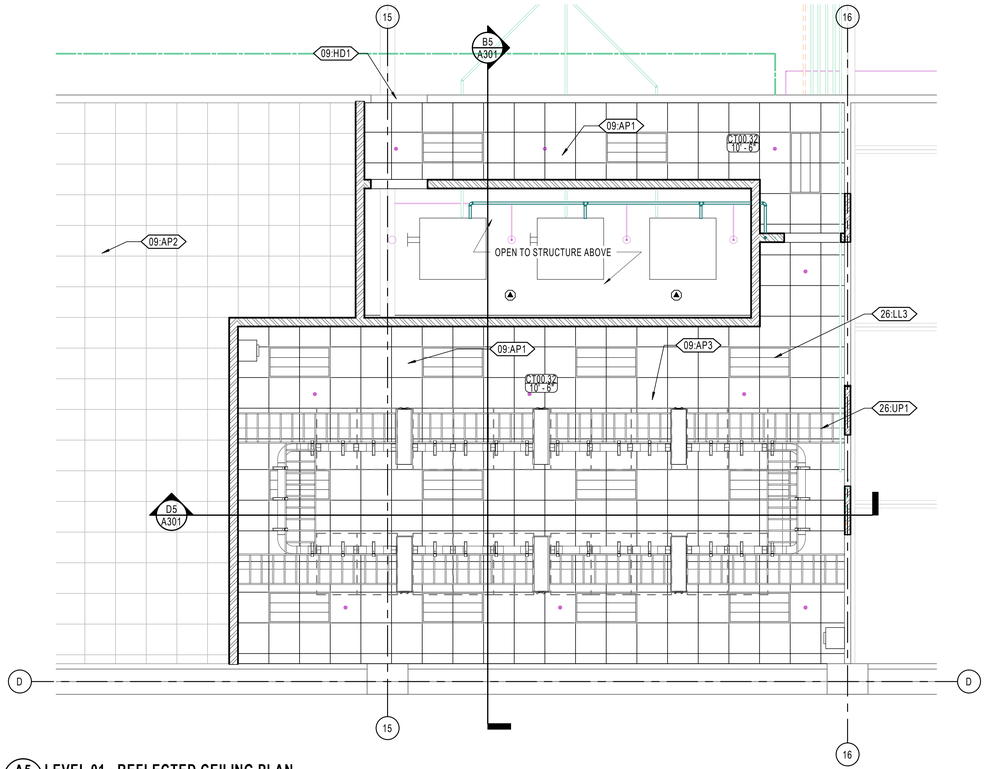

A5 A151 **LEVEL 01 - REFLECTED CEILING PLAN**
1/4" = 1'-0"

KEYNOTE LEGEND	
Key Value	Keynote Text
01:EA1	EXISTING 2X2 ACOUSTIC PANEL CEILING TO REMAIN, REPAIR CEILING WHERE CUT BACK, PROVIDE PROPER EDGE ANGLE AND WIRE TIES FOR TERMINATION POINT TO RESTORE TO FUNCTIONING CEILING
02:DC1	DEMOLISH EXISTING CEILING, LIGHTING, CONDUIT, ETC...
09:AP1	NEW 2X2 LAY-IN ACOUSTICAL PANEL CEILING; COORDINATE LIGHTING WITH SERVER RACK LOCATIONS
09:AP2	EXISTING 2X2 LAY-IN ACOUSTICAL PANEL CEILING
09:AP3	LAY-IN CEILING TILES TO ALIGN TO FLOOR TILES
09:HD1	PROVIDE HEADER AT NEW DOORWAY
26:LL3	LAY-IN LIGHT FIXTURE; SEE ELECTRICAL
26:UP1	ELECTRICAL EQUIPMENT, SEE ELECTRICAL

GENERAL NOTE - RCP

A. SEE MECHANICAL AND ELECTRICAL DRAWINGS FOR ADDITIONAL LIGHTING AND DIFFUSER INFORMATION.
B. THE CEILING HEIGHT SHOWN IN THE ROOM TAG INDICATES THE HEIGHT OF THE DOMINANT CEILING FINISH. SEE ADDITIONAL CEILING FINISH CALLOUTS FOR OTHER CEILING HEIGHT OR FEATURES.
C. THE CONTRACTOR SHALL COORDINATE ALL TRADES TO ENSURE THAT DESIGNATED CEILING HEIGHTS CAN BE ACHEIVED. NOTIFY ARCHITECT OF ANY CONFLICTS OR CONDITIONS THAT PREVENT THIS FROM OCCURRING BEFORE PROCEEDING WITH THE WORK.

ARCH | NEXUS
Architectural NEXUS, Inc.
2505 East Parleys Way
Salt Lake City, UT 84109
T 801.924.5000
http://www.archnexus.com

Original drawings remain the property of the Architect and as such the Architect retains total ownership and control. The design represented by these drawings is sold to the client for a one time use, unless otherwise agreed upon in writing by the Architect.
© Architectural Nexus, Inc. 2019

LICENSED ARCHITECT
April 13, 2021
JOHN L. HOLBROOK
11144277-0301
STATE OF UTAH

UNIVERSITY OF UTAH
WILLIAMS BLDG TIER 3 NETWORK NODE INTERFACE REMODEL
UNIVERSITY OF UTAH RESEARCH PARK, CHIPETA WAY
SALT LAKE CITY, UT

#	Date	Revision

PERMIT SET

NEXUS PROJECT #: 20101
CHECKED BY: Checker
DRAWN BY: JLH
DATE: 04.13.21

AGENCY APPROVAL

REFLECTED CEILING PLAN

A151

5/20/2021 2:58:52 PM

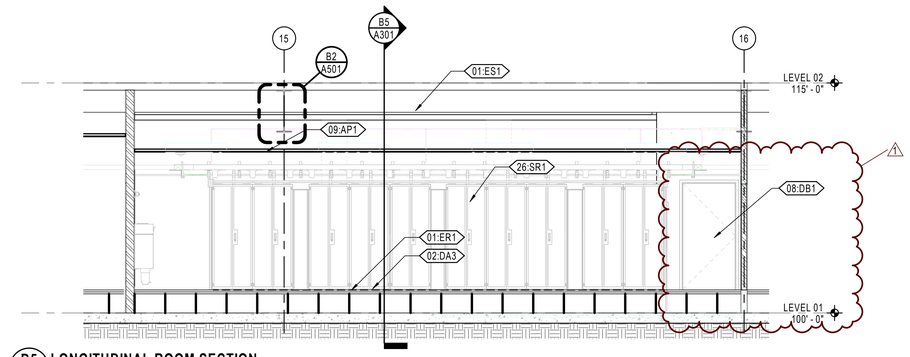

D5 LONGITUDINAL ROOM SECTION
A301 1/4" = 1'-0"

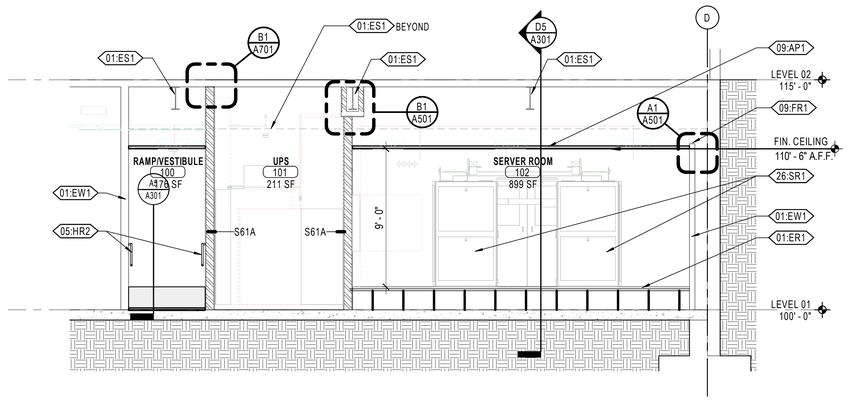

B5 ROOM CROSS SECTION
A301 1/4" = 1'-0"

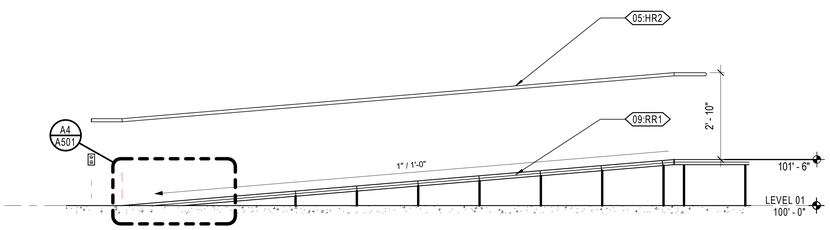

A5 RAMP SECTION
A301 1/2" = 1'-0"

5/20/2021 2:58:56 PM

GENERAL NOTE - SECTION

A. WALL DIMENSIONS ARE TO GRID LINE OR FACE OF WALL STRUCTURE. "CLEAR" DIMENSIONS ARE TO FACE OF WALL FINISH.
B. SEE MECHANICAL AND ELECTRICAL DRAWINGS FOR MORE INFORMATION.
C. SEE G SERIES SHEETS FOR WALL TYPES AND TYPICAL ACCESSIBILITY CLEARANCE AND COMPLIANCE REQUIREMENTS.
D. DO NOT SCALE DRAWINGS.

KEYNOTE LEGEND	
Key Value	Keynote Text
01:ER1	EXISTING RAISED ACCESS FLOOR; STRUCTURAL EVALUATION FOR SEISMIC STABILITY REQUIRED
01:ES1	EXISTING STRUCTURE TO REMAIN; PROTECT FIRE PROOFING, PATCH FIREPROOFING AS NEEDED. VERIFY LOCATION IN FIELD
01:EW1	EXISTING WALL TO REMAIN
02:DA3	CLEAN RAISED ACCESS FLOOR PANELS AS NEEDED
05:HR2	NEW HAND RAIL
08:DB1	DOOR BEYOND, WALL INFILL TO BE BELOW DOOR SILL AND PRESERVE WALL ASSEMBLY RATING
09:AP1	NEW 2x2 CAV-IN ACOUSTICAL PANEL CEILING; COORDINATE LIGHTING WITH SERVER RACK LOCATIONS
09:FR1	ADD FURRING AS NEEDED TO BE 4" ABOVE FINISHED CEILING
09:RR1	RAISED ACCESS FLOOR RAMP WITH INTEGRATED RAMP SHOE, AND RAMP THRESHOLD AT TOP. B.O.D. TATE ACCESS FLOORS
26:SR1	SERVER RACKS AND COILING UNITS; SEE ELECTRICAL

ARCH | NEXUS
Architectural NEXUS, Inc.
2505 East Parleys Way
Salt Lake City, UT 84109
T 801.924.5000
http://www.archnexus.com

Original drawings remain the property of the Architect and as such the Architect retains total ownership and control. The design represented by these drawings is sold to the client for a one time use, unless otherwise agreed upon in writing by the Architect.
© Architectural Nexus, Inc. 2019

LICENSED ARCHITECT
April 13, 2021
JOHN L. HOLBROOK
11144277-0301
STATE OF UTAH

UNIVERSITY OF UTAH
WILLIAMS BLDG TIER 3 NETWORK NODE INTERFACE REMODEL
UNIVERSITY OF UTAH RESEARCH PARK, CHIPETA WAY
SALT LAKE CITY, UT

#	Date	Revision
1	21.05.21	PERMIT REVIEW COMMENTS

PERMIT SET

NEXUS PROJECT #: 20101
CHECKED BY: Checker
DRAWN BY: JLH
DATE: 04.13.21

AGENCY APPROVAL

ROOM SECTIONS

A301

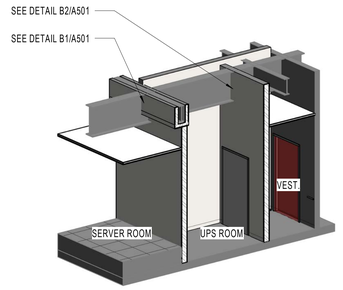

D1 A501 **AXON VIEW**

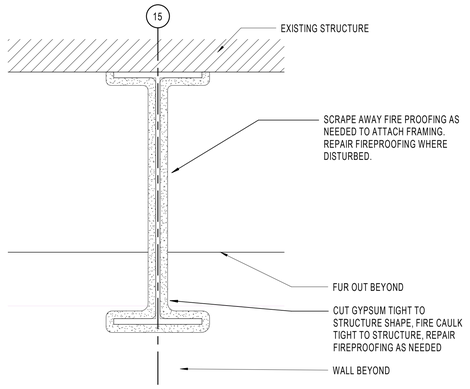

B2 A501 **FURRING AROUND EXISTING BEAM** 1 1/2" = 1'-0"

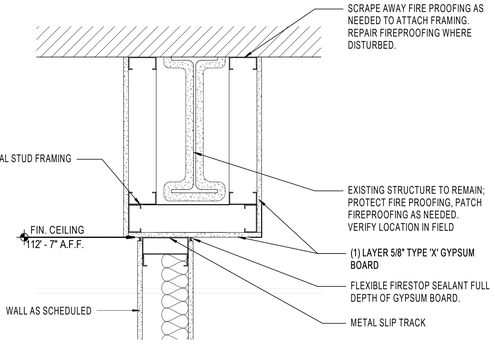

B1 A501 **HEAD OF WALL DETAIL @ STRUCTURE** 1 1/2" = 1'-0"

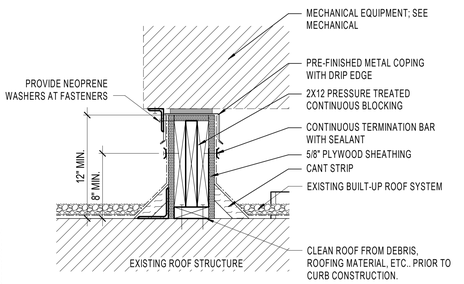

A5 A501 **EQUIPMENT CURB DETAIL** 1 1/2" = 1'-0"

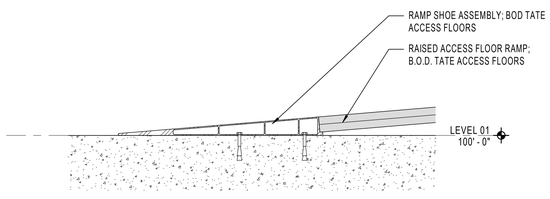

A4 A501 **RAMP SHOE DETAIL** 1 1/2" = 1'-0"

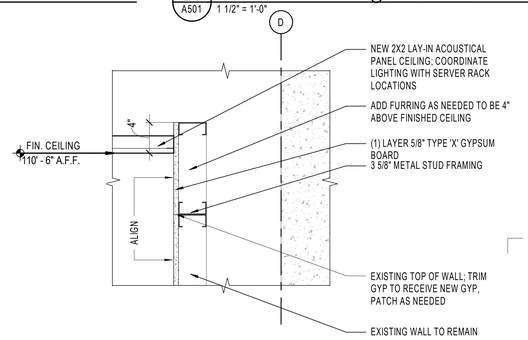

A1 A501 **EXISTING TOP OF WALL DETAIL** 1 1/2" = 1'-0"

5/20/2021 2:59:01 PM

ARCH | NEXUS

Architectural NEXUS, Inc.
2505 East Parleys Way
Salt Lake City, UT 84109
T 801.924.5000
http://www.archnexus.com

Original drawings remain the property of the Architect and as such the Architect retains total ownership and control. The design represented by these drawings is sold to the client for a one time use, unless otherwise agreed upon in writing by the Architect.
© Architectural Nexus, Inc. 2019

LICENSED ARCHITECT
April 13, 2021
JOHN L HOLBROOK
11144277-0301
STATE OF UTAH

UNIVERSITY OF UTAH
WILLIAMS BLDG TIER 3 NETWORK NODE INTERFACE REMODEL
UNIVERSITY OF UTAH RESEARCH PARK, CHIPETA WAY
SALT LAKE CITY, UT

#	Date	Revision

AGENCY APPROVAL

PERMIT SET

NEXUS PROJECT #: 20101
CHECKED BY: Checker
DRAWN BY: JLH
DATE: 04.13.21

ARCHITECTURAL DETAILS

A501

DOOR SCHEDULE

NUMBER	DOOR SIZE WIDTH	DOOR SIZE HEIGHT	DOOR TYPE	DOOR FINISH	FRAME DETAIL HEAD	FRAME DETAIL JAMB	FRAME DETAIL THRES	FRAME TYPE	FRAME FINISH	FIRE RATING	HARDWARE GROUP	NOTES	NUMBER
100	3' - 6"	7' - 0"	HS01					SH		45 MIN.	OWNER PROVIDED	CLOSERS TO BE PROVIDED	100
101	3' - 6"	7' - 0"	HS01					SH		45 MIN.	OWNER PROVIDED	CLOSERS TO BE PROVIDED	101
102	3' - 6"	7' - 0"	HS02					SH		45 MIN.	OWNER PROVIDED	CLOSERS TO BE PROVIDED	102
E1	3' - 0"	6' - 10"	EXISTING									REMOVE DOOR	E1
E2	3' - 0"	6' - 10"	EXISTING									REMOVE DOOR TO BE REUSED	E2
E3	3' - 0"	6' - 10"	EXISTING									REMOVE DOOR TO BE REUSED	E3

GLAZING SCHEDULE

1	1/4" TEMPERED, FIRE RATED

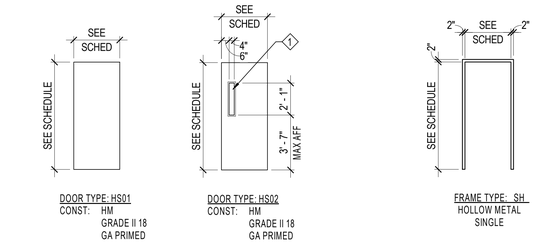

B A601 **DOOR TYPES** 1/4" = 1'-0"

D A601 **FRAME TYPES** 1/4" = 1'-0"

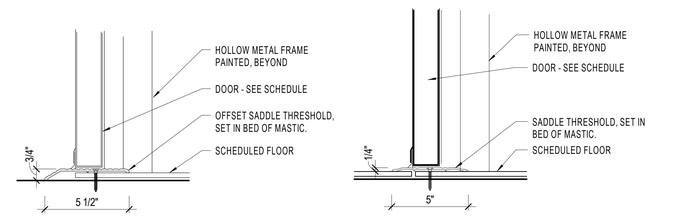

A3 A601 **THRESHOLD DETAIL - OFFSET SADDLE** 3" = 1'-0"

A2 A601 **THRESHOLD DETAIL - SADDLE** 3" = 1'-0"

5/20/2021 2:59:01 PM

ARCH | NEXUS

Architectural NEXUS, Inc.
2505 East Parleys Way
Salt Lake City, UT 84109
T 801.924.5000
http://www.archnexus.com

Original drawings remain the property of the Architect and as such the Architect retains total ownership and control. The design represented by these drawings is sold to the client for a one time use, unless otherwise agreed upon in writing by the Architect.
© Architectural Nexus, Inc. 2019

LICENSED ARCHITECT
April 13, 2021
JOHN L HOLBROOK
11144277-0301
STATE OF UTAH

UNIVERSITY OF UTAH
WILLIAMS BLDG TIER 3 NETWORK NODE INTERFACE REMODEL
UNIVERSITY OF UTAH RESEARCH PARK, CHIPETA WAY
SALT LAKE CITY, UT

#	Date	Revision
1	21.05.21	PERMIT REVIEW COMMENTS

PERMIT SET

NEXUS PROJECT #: 20101
CHECKED BY: Checker
DRAWN BY: JLH
DATE: 04.13.21

AGENCY APPROVAL

DOOR SCHEDULES AND TYPES

A601

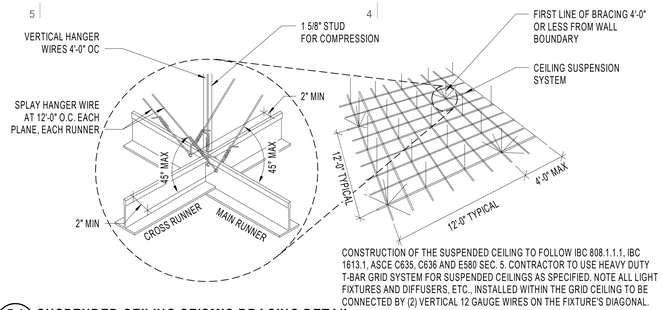

CONSTRUCTION OF THE SUSPENDED CEILING TO FOLLOW IBC 808.1.1.1, IBC 1613.1, ASCE C635, C636 AND E580 SEC. 5. CONTRACTOR TO USE HEAVY DUTY T-BAR GRID SYSTEM FOR SUSPENDED CEILINGS AS SPECIFIED. NOTE ALL LIGHT FIXTURES AND DIFFUSERS, ETC., INSTALLED WITHIN THE GRID CEILING TO BE CONNECTED BY (2) VERTICAL 12 GAUGE WIRES ON THE FIXTURE'S DIAGONAL.

D4 / A701 — SUSPENDED CEILING SEISMIC BRACING DETAIL
NOT TO SCALE

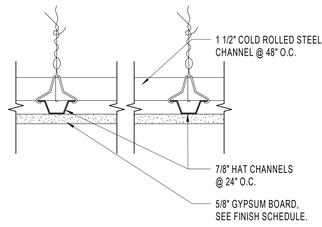

D2 / A701 — SUSPENDED CEILING DETAIL
3" = 1'-0"

NOTE: PROVIDE 15/16" PERIMETER SUPPORTING CLOSURE ANGLE. ONE END OF THE CEILING GRID SHALL BE ATTACHED TO THE CLOSURE ANGLE ON TWO ADJACENT SIDES. THE OPPOSITE ENDS SHALL HAVE A 3/4" CLEARANCE FROM THE WALL AND SHALL REST UPON AND BE FREE TO SLIDE ON CLOSURE ANGLE.

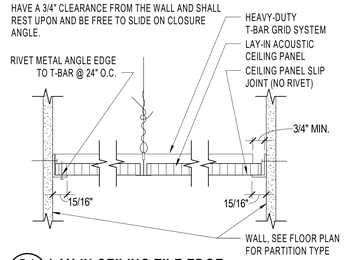

D1 / A701 — LAY-IN CEILING TILE EDGE
3" = 1'-0"

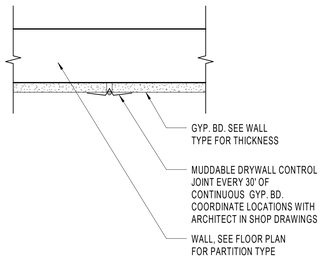

C4 / A701 — DRYWALL CONTROL JOINTS
3" = 1'-0"

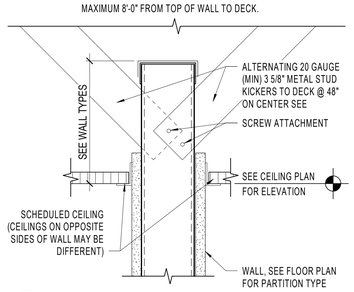

C3 / A701 — WALL SEISMIC BRACING DETAIL
3" = 1'-0"

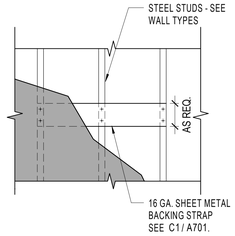

C2 / A701 — MOUNTING PLATE DETAIL
3" = 1'-0"

NOTE: FOR UNDER 100 POUNDS
USE THIS BLOCKING DETAIL AT ALL ACCESSORIES, AND WALL PROTECTION ITEMS. USE FOR WALL HUNG EQUIPMENT UNDER 100 POUNDS IN WEIGHT.

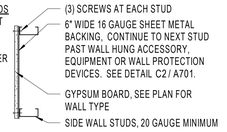

NOTE: FOR OVER 100 POUNDS
USE THIS BLOCKING DETAIL FOR LOCATION WHERE WALL HUNG EQUIPMENT WEIGHTS ARE BETWEEN 100 AND 500 POUNDS.
*FOR WEIGHTS BETWEEN 500 AND 700 POUNDS INCREASE SIDE WALL STUDS AND TRACKS TO 16 GAUGE

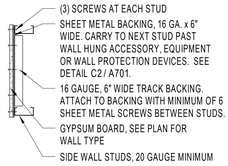

C1 / A701 — WALL BACKING DETAILS
12" = 1'-0"

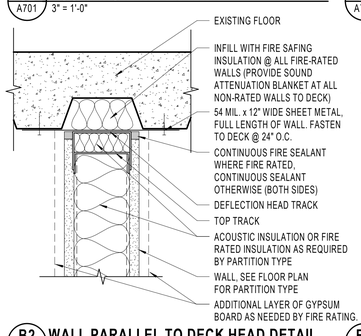

B2 / A701 — WALL PARALLEL TO DECK HEAD DETAIL
3" = 1'-0"

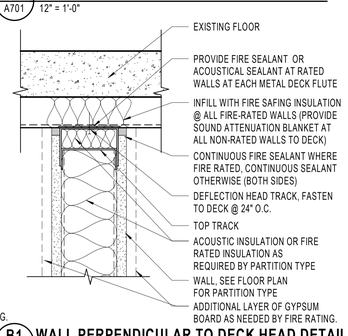

B1 / A701 — WALL PERPENDICULAR TO DECK HEAD DETAIL
3" = 1'-0"

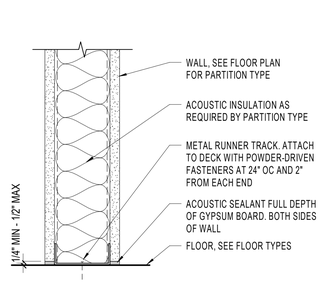

A4 / A701 — NON-RATED BASE DETAIL
3" = 1'-0"

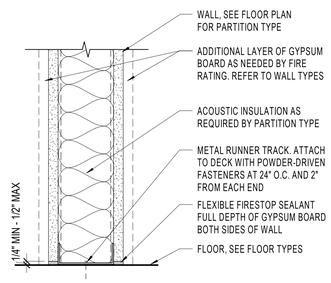

A3 / A701 — FIRE RATED BASE DETAIL
3" = 1'-0"

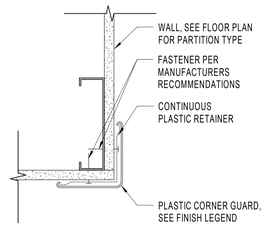

A1 / A701 — CORNER GUARD DETAIL
3" = 1'-0"

ARCH | NEXUS
Architectural NEXUS, Inc.
2505 East Parleys Way
Salt Lake City, UT 84109
T 801.924.5000
http://www.archnexus.com

Original drawings remain the property of the Architect and as such the Architect retains total ownership and control. The design represented by these drawings is sold to the client for a one time use, unless otherwise agreed upon in writing by the Architect.
© Architectural Nexus, Inc. 2019

LICENSED ARCHITECT
April 13, 2021
JOHN L. HOLBROOK
11144277-0301
STATE OF UTAH

UNIVERSITY OF UTAH
WILLIAMS BLDG TIER 3 NETWORK NODE INTERFACE REMODEL
UNIVERSITY OF UTAH RESEARCH PARK, CHIPETA WAY
SALT LAKE CITY, UT

#	Date	Revision

PERMIT SET

NEXUS PROJECT #: 20101
CHECKED BY: Checker
DRAWN BY: JLH
DATE: 04.13.21

AGENCY APPROVAL

TYPICAL DETAILS

A701

5/20/2021 2:59:04 PM

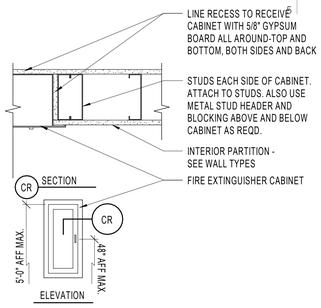

D5 / A702 FIRE EXTINGUISHER CAB. RECESSED
1 1/2" = 1'-0"

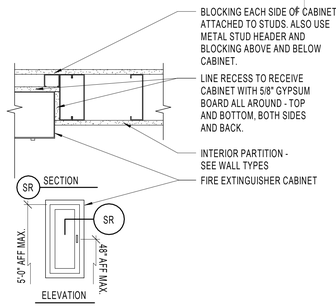

D4 / A702 FIRE EXTINGUISHER CAB. SEMI-RECESSED
1 1/2" = 1'-0"

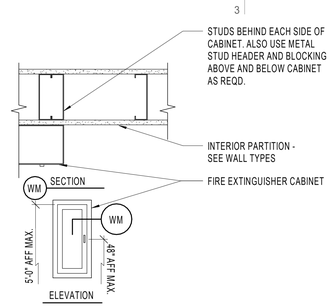

D3 / A702 FIRE EXTINGUISHER CAB. WALL MOUNTED
1 1/2" = 1'-0"

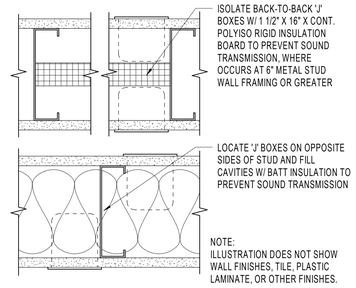

D1 / A702 TYPICAL ELEC. DEVICE WALL DETAIL
3" = 1'-0"

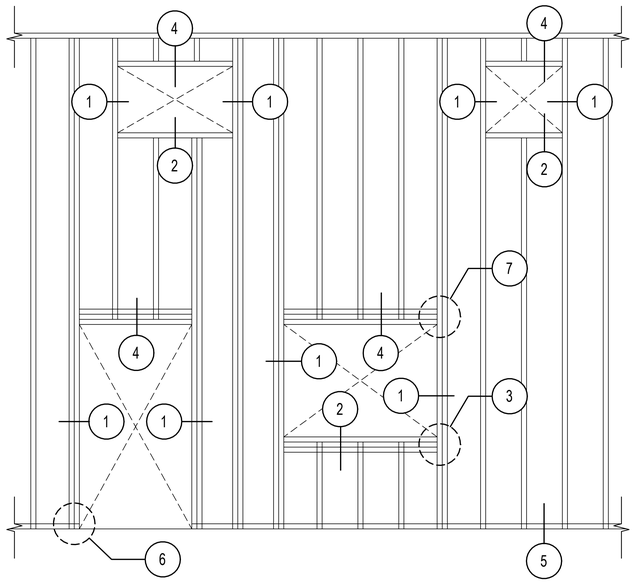

B5 / A702 WALL & OPENING FRAMING
1/2" = 1'-0"

PARTITION PRIORITY LEGEND

TWO HOUR FIRE AND SMOKE WALL	PRIORITY 1 (HIGHEST)
TWO HOUR FIRE WALL	PRIORITY 2
TWO HOUR SHAFT WALL	PRIORITY 2
ONE HOUR FIRE AND SMOKE WALL	PRIORITY 3
ONE HOUR FIRE WALL	PRIORITY 4
SMOKE TIGHT WALL	PRIORITY 5
NON-RATED WALL	PRIORITY 6 (LOWEST)

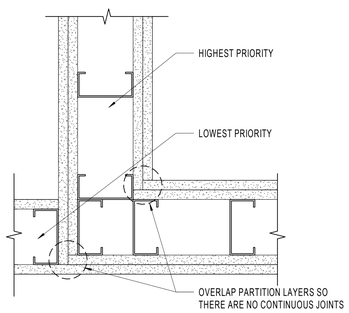

A5 / A702 PARTITION PRIORITY LEGEND
3" = 1'-0"

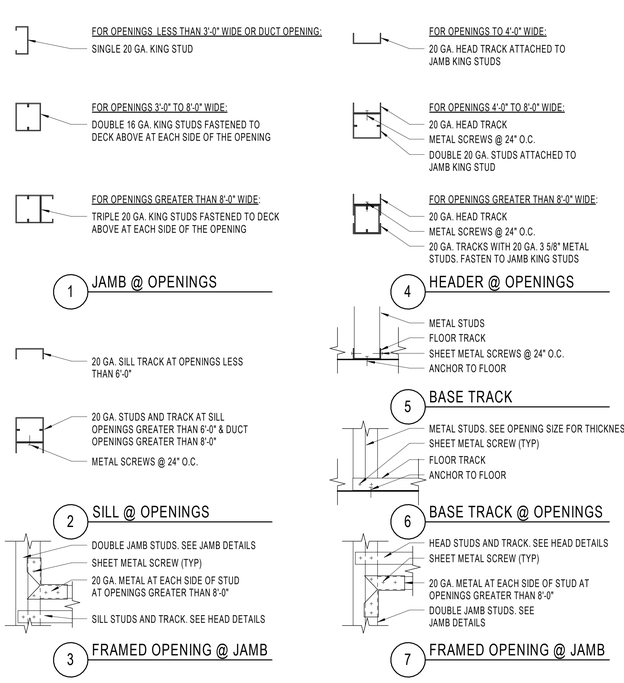

A3 / A702 WALL & OPENING FRAMING LEGEND
1 1/2" = 1'-0"

ARCH | NEXUS
Architectural NEXUS, Inc.
2505 East Parleys Way
Salt Lake City, UT 84109
T 801.924.5000
http://www.archnexus.com

Original drawings remain the property of the Architect and as such the Architect retains total ownership and control. The design represented by these drawings is sold to the client for a one time use, unless otherwise agreed upon in writing by the Architect.
© Architectural Nexus, Inc. 2019

LICENSED ARCHITECT
April 13, 2021
JOHN L HOLBROOK
11144277-0301
STATE OF UTAH

UNIVERSITY OF UTAH
WILLIAMS BLDG TIER 3 NETWORK NODE INTERFACE REMODEL
UNIVERSITY OF UTAH RESEARCH PARK, CHIPETA WAY
SALT LAKE CITY, UT

#	Date	Revision

PERMIT SET

NEXUS PROJECT #: 20101
CHECKED BY: Checker
DRAWN BY: JLH
DATE: 04.13.21

AGENCY APPROVAL

TYPICAL DETAILS

A702

5/20/2021 2:59:07 PM

FINISH LEGEND		
CODE	FINISH TYPE	DESCRIPTION
FLOOR FINISHES		
AF1		BOD: TATE ACCESS FLOOR RAMP AND ACCESSORIES
CONC		EXISTING EXPOSED CONCRETE; CLEAN AND REPAIR AS NEEDED, PROVIDE COVERS FOR ABANDONDED CONDUIT AND OPENINGS
EF1		EXISTING RAISED ACCESS FLOORING; CLEAN, AND REUSE TILES
BASE FINISHES		
RB1	6" COVED RUBBER BASE	MANUFACTURER: -manufacturer- STYLE: -style- COLOR: -color- (ARCHITECT TO APPROVE SAMPLE)
WALL FINISHES		
P1	PAINTED GYPSUM BOARD	EXISTING WALL COLOR: WHITE APPLICATION: PATCH AND REPAIR ALL WALL SURFACES BEFORE PAINTING
P2	PAINTED GYPSUM BOARD	COLOR: WHITE FINISH: SMOOTH FINISH
CEILING FINISHES		
ACP1	24" X 24" ACOUSTICAL CEILING PANEL	MANUFACTURER: -manufacturer- PRODUCT: -product- COLOR: -color- TRIM: -trim- (ARCHITECT TO APPROVE SAMPLE)
OPEN	OPEN TO STRUCTURE ABOVE	PROTECT FIRE SPRAYED STRUCTURE

ROOM FINISH SCHEDULE

				Walls						
Room	Name	Floor	Base	N	E	S	W	Ceiling	Room	Comments
100	RAMP/VESTIBULE	AF1/CONC	RB1	P1	P1	P2	P1	ACP1	100	
101	UPS	CONC	RB1	P2	P2	P2	P2	OPEN	101	
102	SERVER ROOM	EF1	RB1	P2	P1	P1	P2	ACP1	102	

GENERAL NOTES - FINISHES

A. THE ABSENCE OF A VIEW DOES NOT PRECLUDE THE REQUIREMENT TO PROVIDE A FINISH AS INDICATED BY THE FINISH SCHEDULE.

B. SEE FLOOR FINISH PLANS AND INTERIOR ELEVATION VIEWS, WHERE DRAWN, FOR ADDITIONAL FINISH LOCATION, TYPE, AND TRANSITION INFORMATION.

C. SEE REFLECTED CEILING PLANS FOR CEILING FEATURES AND FINISH ELEVATIONS.

ALL FINISHES:

1. WHERE A FINISH IS PARTLY HIDDEN BY AN OBJECT, EXTEND THAT FINISH BEHIND THE OBJECT.

2. WHERE MULTIPLE FINISHES ARE SCHEDULED, REFER TO FLOOR FINISH PLANS OR INTERIOR ELEVATIONS FOR LOCATIONS OF TRANSITIONS.

FLOOR FINISHES:

1. EXTEND FLOOR FINISHES UNDER COUNTERS, INTO KNEE SPACES AT CABINETS, AND UNDER ALL OTHER OBJECTS SHOWN IN FINISH PLANS THAT MAY OBSCURE THE EXTENT OF THE FLOOR FINISH.

BASE FINISHES:

1. ROOMS WHERE BASE SCHEDULED, PROVIDE BASE AT ALL WALLS WHETHER OR NOT IT IS SHOWN IN ELEVATION, INCLUDING ALCOVES AND OFFSETS.

WALLS:

1. EXTEND ALL WALL FINISHES BEHIND CABINETS, MIRRORS AND INTO OTHER ARES THAT MAY BE HIDDEN IN ELEVATION VIEWS.

CEILINGS:

1. PAINT AREAS ABOVE SUSPENDED CEILINGS THAT ARE VISIBLE FROM BELOW. COLOR: BLACK.

ARCH | NEXUS

Architectural NEXUS, Inc.
2505 East Parleys Way
Salt Lake City, UT 84109
T 801.924.5000
http://www.archnexus.com

Original drawings remain the property of the Architect and as such the Architect retains total ownership and control. The design represented by these drawings is sold to the client for a one time use, unless otherwise agreed upon in writing by the Architect.
© Architectural Nexus, Inc. 2019

LICENSED ARCHITECT
April 13, 2021
JOHN L HOLBROOK
11144277-0301
STATE OF UTAH

UNIVERSITY OF UTAH
WILLIAMS BLDG TIER 3 NETWORK NODE INTERFACE REMODEL
UNIVERSITY OF UTAH RESEARCH PARK, CHIPETA WAY
SALT LAKE CITY, UT

#	Date	Revision

PERMIT SET

NEXUS PROJECT #: 20101
CHECKED BY: Checker
DRAWN BY: JLH
DATE: 04.13.21

AGENCY APPROVAL

ROOM FINISH SCHEDULE

AI601

5/20/2021 2:59:08 PM

ELECTRICAL SHEET INDEX

EE001	SHEET INDEX, ABBR., AND GEN. NOTES
EE002	SYMBOLS LEGEND
ED101	LEVEL 1 ELECTRICAL DEMOLITION PLAN
EP101	OVERALL LEVEL 1 POWER PLAN
EP102	PARTIAL ROOF POWER PLAN
EP401	ENLARGED AREA POWER PLAN
EP402	ENLARGED DATA ROOM POWER PLAN
EP600	ONE-LINE DIAGRAM SCHEDULES AND NOTES
EP601	ONE-LINE DIAGRAM - EXISTING
EP602	ONE-LINE DIAGRAM - NEW
EP603	EQUIPMENT SCHEDULE
EP604	PANEL SCHEDULES
EL101	LEVEL 1 LIGHTING PLAN
EL601	INTERIOR LIGHTING FIXTURE SCHEDULE
ET001	TELECOM SCHEDULES AND NOTES
ET100	OVERALL LEVEL 1 TELECOM PLAN
ET101	LEVEL 1 TELECOM PLAN
ET301	ENLARGED SERVER 102 SECTION DETAILS
ET401	ENLARGED SERVER 102 PLANS
ET402	ENLARGED SERVER 102 PLANS
ET501	TELECOM EQUIPMENT RACK ELEVATIONS
ET502	TELECOM EQUIPMENT RACK ELEVATIONS
ET503	TELECOM EQUIPMENT RACK ELEVATIONS
ET504	TELECOM EQUIPMENT RACK ELEVATIONS
ET505	TELECOM DETAILS
ET506	TELECOM EQUIPMENT RACK GROUNDING DETAIL
ET601	TELECOM RISER DIAGRAMS
FA101	LEVEL 1 FIRE ALARM PLAN
FA401	ENLARGED AREA FIRE ALARM PLAN
FA601	FIRE ALARM RISER

ABBREVIATIONS

NOTE: ALL ABBREVIATIONS MAY NOT BE USED.

1P	SINGLE POLE
1PH	SINGLE-PHASE
1WAY	ONE-WAY
2/C	TWO-CONDUCTOR
2WAY	TWO-WAY
3/C	THREE-CONDUCTOR
3WAY	THREE-WAY
4OUT	QUADRUPLE RECEPTACLE OUTLET
4PDT	FOUR-POLE DOUBLE THROW
4PST	FOUR-POLE SINGLE THROW
4W	FOUR-WIRE
4WAY	FOUR-WAY
A	ABOVE COUNTER
AC	ARMORED CABLE
ADA	AMERICANS WITH DISABILITIES ACT
ADJ	ADJACENT
AFF	ABOVE FINISHED FLOOR
AFG	ABOVE FINISHED GRADE
AIC	AMPERE INTERRUPTING CAPACITY
ALUM	ALUMINUM
AMP	AMPERE
ANN	ANNUNCIATOR
AP	ACCESS POINT (WIRELESS DATA)
AR	AS REQUIRED
ASC	AMPS SHORT CIRCUIT
ATS	AUTOMATIC TRANSFER SWITCH
AV	AUDIO VISUAL
AWG	AMERICAN WIRE GAGE
BB XFMR	BUCK-BOOST TRANSFORMER
C	CEILING MOUNTED
CATV	COMMUNITY ANTENNA TELEVISION
CB	CIRCUIT BREAKER
CCBA	CUSTOM COLOR AS SELECTED BY ARCHITECT
CCTV	CLOSED CIRCUIT TELEVISION
CF/CI	CONTRACTOR FURNISHED/ CONTRACTOR INSTALLED
CF/OI	CONTRACTOR FURNISHED/ OWNER INSTALLED
CFBA	CUSTOM FINISH AS SELECTED BY ARCHITECT
CKT	CIRCUIT
CM	CONSTRUCTION MANAGER
CND	CONDUIT
CO	CONVENIENCE OUTLET
COR	CONTRACTING OFFICER'S REPRESENTATIVE
CP	CONTROL PANEL
CT	CURRENT TRANSFORMER
CTV	CABLE TELEVISION
CU	COPPER
dBA	UNIT OF SOUND LEVEL
DPDT	DOUBLE POLE, DOUBLE THROW
DS	DISCONNECT SWITCH
EA	EACH
EM	EMERGENCY
EMT	ELECTRICAL METALLIC TUBING
ENT	ELECTRIC NONMETALLIC TUBING
EPO	EMERGENCY POWER OFF
EQUIP	EQUIPMENT
EX	EXISTING
F	FURNITURE MOUNTED
FA	FIRE ALARM
FCP	FIRE ALARM CONTROL PANEL
FLA	FULL LOAD AMPS
FMC	FLEXIBLE METAL CONDUIT
FOB	FREIGHT ON BOARD
FVNR	FULL VOLTAGE NON-REVERSING
FVR	FULL VOLTAGE REVERSING
GEN	GENERATOR
GFCI	GROUND FAULT INTERRUPTER
GFP	GROUND FAULT PROTECTION
GND	GROUND
HD	HEAVY DUTY
HID	HIGH INTENSITY DISCHARGE
HOA	HAND-OFF-AUTOMATIC
HP	HORSE POWER
HPF	HIGH POWER FACTOR
HPS	HIGH PRESSURE SODIUM
HV	HIGH VOLTAGE
HZ	HERTZ
I/O	INPUT/ OUTPUT
IG	ISOLATED GROUND
IMC	INTERMEDIATE METAL CONDUIT
IN/IS	INSULATED/ ISOLATED
IR	INFRARED
J-BOX	JUNCTION BOX
kV	KILOVOLT
kVA	KILOVOLT AMPERE
kVAR	KILOVOLT AMPERE REACTIVE
kW	KILOWATT
kWh	KILOWATT HOUR
LED	LIGHT EMITTING DIODE
LFMC	LIQUID TIGHT FLEXIBLE METAL CONDUIT
LFNC	LIQUID TIGHT FLEXIBLE NONMETALLIC CONDUIT
LPS	LOW PRESSURE SODIUM
LRA	LOCKED ROTOR AMPS
LTG	LIGHTING
LV	LOW VOLTAGE
MATV	MASTER ANTENNA TELEVISION SYSTEM
MAX	MAXIMUM
MC	METAL CLAD
MCA	MINIMUM CIRCUIT AMPS
MCB	MAIN CIRCUIT BREAKER
MCC	MOTOR CONTROL CENTER
MCP	MOTOR CIRCUIT PROTECTION
MDP	MAIN DISTRIBUTION PANEL
MG	MOTOR GENERATOR
MH	MANHOLE
MIN	MINIMUM
MLO	MAIN LUGS ONLY
MOCP	MAXIMUM OVERCURRENT PROTECTION
MTS	MANUAL TRANSFER SWITCH
NA	NOT APPLICABLE
NC	NORMALLY CLOSED
NEC	NATIONAL ELECTRICAL CODE
NEMA	NATIONAL ELECTRICAL MANUFACTURERS ASSOCIATION
NFC	NATIONAL FIRE CODE
NFPA	NATIONAL FIRE PROTECTION ASSOCIATION
NIC	NOT IN CONTRACT
NL	NIGHT LIGHT
NO	NORMALLY OPEN
NTS	NOT TO SCALE
OC	ON CENTER
OCP	OVER CURRENT PROTECTION
OF/CI	OWNER FURNISHED/ CONTRACTOR INSTALLED
OF/OI	OWNER FURNISHED/ OWNER INSTALLED
OFP	OBTAIN FROM PLANS
OH DR	OVERHEAD (COILING) DOOR
OL	OVERLOAD
PB	PUSHBUTTON
PF	POWER FACTOR
PH	PHASE
PNL	PANEL
PT	POTENTIAL TRANSFORMER
PTZ	PAN/TILT/ZOOM
QTY	QUANTITY
R	REMOVE
RCP	REFLECTED CEILING PLAN
RMC	RIGID METAL CONDUIT
RNC	RIGID NONMETAL CONDUIT
RPM	REVOLUTIONS PER MINUTE
RR	REMOVE AND RELOCATE
S/S	START/STOP
SCA	SHORT CIRCUIT AMPS
SCBA	STANDARD COLOR AS SELECTED BY ARCHITECT
SF	SQUARE FOOT (FEET)
SFBA	STANDARD FINISH AS SELECTED BY ARCHITECT
SPD	SURGE PROTECTIVE DEVICE
SPDT	SINGLE POLE, DOUBLE THROW
SPEC	SPECIFICATION
SPST	SINGLE POLE, SINGLE THROW
ST	SINGLE THROW
SWBD	SWITCHBOARD
SWGR	SWITCHGEAR
TL	TWIST LOCK
TP	TELEPHONE POLE
TP	TWISTED PAIR
TTB	TELEPHONE TERMINAL BOARD
TV	TELEVISION
TVSS	TRANSIENT VOLTAGE SURGE SUPPRESSER
TYP	TYPICAL
UF	UNDERFLOOR
UGND	UNDERGROUND
UPS	UNINTERRUPTIBLE POWER SUPPLY
V	VOLTS
VA	VOLT AMPERE
VFC/VFD	VARIABLE FREQUENCY MOTOR CONTROLLER
W/	WITH
W/O	WITHOUT
WP	WEATHERPROOF
XFMR	TRANSFORMER

GENERAL ELECTRICAL NOTES

1. CLARIFICATION METHODS: AT THE TIME OF BIDDING, BIDDERS SHALL FAMILIARIZE THEMSELVES WITH THE DRAWINGS AND SPECIFICATIONS. ANY QUESTIONS, MISUNDERSTANDINGS, CONFLICTS, DELETIONS, DISCONTINUED PRODUCTS, CATALOG NUMBER DISCREPANCIES, DISCREPANCIES BETWEEN THE EQUIPMENT SUPPLIED AND THE INTENT OR FUNCTION OF THE EQUIPMENT, ETC, SHALL BE SUBMITTED TO THE ARCHITECT/ENGINEER IN WRITING FOR CLARIFICATION PRIOR TO ISSUANCE OF THE FINAL ADDENDUM AND BIDDING OF THE PROJECT. WHERE DISCREPANCIES OR MULTIPLE INTERPRETATIONS OCCUR, THE MOST STRINGENT (WHICH IS GENERALLY RECOGNIZED AS THE MOST COSTLY) THAT MEETS THE INTENT OF THE DOCUMENTS SHALL BE ENFORCED.

2. OWNER FURNISHED ITEMS: THE OWNER WILL FURNISH MATERIAL AND EQUIPMENT AS INDICATED IN THE CONTRACT DOCUMENTS TO BE INCORPORATED INTO THE WORK. THESE ITEMS ARE ASSIGNED TO THE INSTALLER AND COSTS FOR RECEIVING, HANDLING, STORAGE, IF REQUIRED, AND INSTALLATION ARE INCLUDED IN THE CONTRACT SUM.

   A. THE INSTALLER'S RESPONSIBILITIES ARE THE SAME AS IF THE INSTALLER FURNISHED THE MATERIALS OR EQUIPMENT.

   B. THE OWNER WILL ARRANGE AND PAY FOR DELIVERY OF OWNER FURNISHED ITEMS FREIGHT ON BOARD JOB SITE AND THE INSTALLER WILL INSPECT DELIVERIES FOR DAMAGE. IF OWNER FURNISHED ITEMS ARE DAMAGED, DEFECTIVE OR MISSING, DOCUMENT DAMAGED ITEMS WITH THE TRANSPORT COMPANY AND THE OWNER WILL ARRANGE FOR REPLACEMENT. THE OWNER WILL ALSO ARRANGE FOR MANUFACTURER'S FIELD SERVICES, AND THE DELIVERY OF MANUFACTURER'S WARRANTIES AND BONDS TO THE INSTALLER.

   C. THE INSTALLER IS RESPONSIBLE FOR DESIGNATING THE DELIVERY DATES OF OWNER FURNISHED ITEMS AND FOR RECEIVING, UNLOADING AND HANDLING OWNER FURNISHED ITEMS AT THE SITE.THE INSTALLER IS RESPONSIBLE FOR PROTECTING OWNER FURNISHED ITEMS FROM DAMAGE, INCLUDING DAMAGE FROM EXPOSURE TO THE ELEMENTS, AND TO REPAIR OR REPLACE ITEMS DAMAGED AS A RESULT OF HIS OPERATIONS.

3. EXPOSED STRUCTURE AREAS (EXCLUDING MECHANICAL, ELECTRICAL, AND COMMUNICATION SPACES); INSTALL RACEWAYS BETWEEN DECK AND STRUCTURE WHEREVER POSSIBLE IN EXPOSED STRUCTURE CEILING AREAS. ROUTE RACEWAYS IN CONCEALED AREAS WHEREVER POSSIBLE. REFER ALL CONDITIONS WHERE RACEWAYS MUST BE INSTALLED WHICH CANNOT COMPLY WITH THESE REQUIREMENTS TO THE ARCHITECT.

4. SUBMITTALS: PROVIDE ORIGINAL ELECTRONIC PDF FORMAT, BOUND, BOOKMARKED (EACH SECTION AND PRODUCT), AND HIGHLIGHTED. JOB NAME AND SUBCONTRACTOR SHALL BE ON THE FRONT COVER. PREPARE INDEX OF EQUIPMENT SUBMITTED IN EACH TAB.

5. REFLECTED CEILING PLANS: COORDINATE THE LOCATION OF LIGHT FIXTURES WITH THE ARCHITECTURAL REFLECTED CEILING PLANS. REFER ALL DISCREPANCIES TO THE ARCHITECT AND ENGINEER.

6. ALL WORK SHALL BE DONE ACCORDING TO THE CURRENT NATIONAL ELECTRIC CODE (NEC), IBC, NFPA, AND IFC. COMPLIANCE AND FINAL APPROVAL IS SUBJECT TO THE ON SITE FIELD INSPECTION OF THE AHJ.

DEFINITIONS

NOTE: ALL DEFINITIONS MAY NOT BE USED.

INDICATED: THE TERM "INDICATED" REFERS TO GRAPHIC REPRESENTATIONS, NOTES, OR SCHEDULES ON THE DRAWINGS, OTHER PARAGRAPHS OR SCHEDULES IN THE SPECIFICATIONS, AND SIMILAR REQUIREMENTS IN THE CONTRACT DOCUMENTS. WHERE TERMS SUCH AS "SHOWN", "NOTED", "SCHEDULED", AND "SPECIFIED" ARE USED, IT IS TO HELP THE READER LOCATE THE REFERENCE, NO LIMITATION ON LOCATION IS INTENDED.

DIRECTED: TERMS SUCH AS "DIRECTED", "REQUESTED", AUTHORIZED", "SELECTED", "APPROVED", "REQUIRED", AND "PERMITTED" MEAN "DIRECTED BY THE ENGINEER", "REQUESTED BY THE ENGINEER", AND SIMILAR PHRASES.

APPROVED: THE TERM "APPROVED", WHERE USED IN CONJUNCTION WITH THE ENGINEER'S ACTION ON THE CONTRACTOR'S SUBMITTALS, APPLICATIONS, AND REQUESTS, IS LIMITED TO THE ENGINEER'S DUTIES AND RESPONSIBILITIES AS STATED IN GENERAL AND SUPPLEMENTARY CONDITIONS.

FURNISH: THE TERM "FURNISH" IS USED TO MEAN "SUPPLY AND DELIVER TO THE PROJECT SITE, READY FOR UNLOADING, UNPACKING, ASSEMBLY, INSTALLATION, AND SIMILAR OPERATIONS."

INSTALL: THE TERM "INSTALL" IS USED TO DESCRIBE OPERATIONS AT PROJECT SITE INCLUDING THE ACTUAL "UNLOADING, UNPACKING, ASSEMBLY, ERECTION, PLACING, ANCHORING, APPLYING, WORKING TO DIMENSION, FINISHING, CURING, PROTECTING, CLEANING, AND SIMILAR OPERATIONS."

PROVIDE: THE TERM "PROVIDE" MEANS "TO FURNISH AND INSTALL, COMPLETE AND READY FOR THE INTENDED USE."

INSTALLER: AN "INSTALLER" IS THE CONTRACTOR OR AN ENTITY ENGAGED BY THE CONTRACTOR, EITHER AS AN EMPLOYEE, SUBCONTRACTOR, OR SUB-SUBCONTRACTOR, FOR PERFORMANCE OF A PARTICULAR CONSTRUCTION ACTIVITY, INCLUDING INSTALLATION, ERECTION, APPLICATION, AND SIMILAR OPERATIONS. INSTALLERS ARE REQUIRED TO BE EXPERIENCED IN THE OPERATIONS THEY ARE ENGAGED TO PERFORM.

TECHNOLOGY SYSTEMS: THE TERM "TECHNOLOGY SYSTEMS" IS USED TO DESCRIBE ALL LOW VOLTAGE SYSTEMS GENERALLY REFERRED TO AS "SPECIAL SYSTEMS". THESE SYSTEMS INCLUDE BUT ARE NOT NECESSARILY LIMITED TO ALL SYSTEMS WHICH UTILIZE VOLTAGES OF LESS THAN 71 VOLTS SUCH AS SOUND SYSTEMS, VIDEO SYSTEMS, TV SYSTEMS, SECURITY SYSTEMS, VOICE AND DATA CABLING SYSTEMS, ETC...

ARCH | NEXUS

Architectural NEXUS, Inc.
2505 East Parleys Way
Salt Lake City, UT 84109
T 801.924.5000
http://www.archnexus.com

Original drawings remain the property of the Architect and as such the Architect retains total ownership and control. The design represented by these drawings is sold to the client for a one time use, unless otherwise agreed upon in writing by the Architect. © Architectural Nexus, Inc. 2019

LICENSED PROFESSIONAL ENGINEER
No. 8182456
TYLER C. SQUIRE
STATE OF UTAH
4/13/2021

UNIVERSITY OF UTAH
WILLIAMS BLDG TIER 3 NETWORK NODE INTERFACE REMODEL
UNIVERSITY OF UTAH RESEARCH PARK, CHIPETA WAY
SALT LAKE CITY, UT

#	Date	Revision

PERMIT SET

NEXUS PROJECT #: 20101
CHECKED BY: TDS
DRAWN BY: DBS
DATE: 02.23.2020

AGENCY APPROVAL

SHEET INDEX, ABBR., AND GEN. NOTES

EE001

5/20/2021 3:44:20 PM

SYMBOLS LEGEND

SYMBOL	DESCRIPTION
REFERENCE AND LINE SYMBOLS	
A5 / E-501	DETAIL INDICATOR: A5 INDICATES DETAIL NUMBER, E-501 INDICATES DRAWING SHEET WHERE DETAIL IS SHOWN.
A5 / E-201	ELEVATION OR SECTION INDICATOR, EXTERIOR: A5 INDICATES ELEVATION OR SECTION NUMBER, E-201 INDICATES DRAWING SHEET WHERE ELEVATION OR SECTION IS SHOWN.
A5 / E-201	ELEVATION OR SECTION INDICATOR, INTERIOR: A5 INDICATES ELEVATION OR SECTION NUMBER, E-201 INDICATES DRAWING SHEET WHERE ELEVATION OR SECTION IS SHOWN.
ROOM NAME 100	ROOM IDENTIFIER WITH ROOM NAME AND NUMBER.
1	KEYNOTE INDICATOR.
1	REVISION INDICATOR.
X-X / XMDP	MECHANICAL EQUIPMENT INDICATOR. "X-X" INDICATES EQUIPMENT MARK SHOWN ON EQUIPMENT SCHEDULE. "XMDP" IDENTIFIES PANEL EQUIPMENT IS CIRCUITED TO. REFER TO EQUIPMENT SCHEDULE FOR ADDITIONAL INFORMATION.
	BREAK, STRAIGHT: TO BREAK PARTS OF DRAWING
	BREAK, ROUND
	NEW LINE: MEDIUM LINE.
	HIDDEN FEATURES LINE: HIDDEN, THIN LINE
	EXISTING TO REMAIN LINE: THIN LINE.
	DEMOLITION LINE: DASHED, MEDIUM LINE
WIRING METHODS	
	WIRING.
	WIRING TURNED UP OR TOWARDS OBSERVER.
	WIRING TURNED DOWN OR AWAY FROM OBSERVER.
A-1,3,5	BRANCH CIRCUIT HOME RUN TO PANELBOARD: NUMBER OF ARROWS INDICATES NUMBER OF CIRCUITS. LETTER AND NUMBER NOTATIONS IDENTIFY PANEL AND CIRCUIT NUMBERS. USE #12 CONDUCTORS, EXCEPT #10 CONDUCTORS SHALL BE INSTALLED IF DISTANCES EXCEED THOSE SPECIFIED IN THE ELECTRICAL SPECIFICATIONS.
1 A-1,3,5	BRANCH CIRCUIT HOME RUN TO PANELBOARD: NUMBER OF ARROWS INDICATES NUMBER OF CIRCUITS. LETTER AND NUMBER NOTATIONS IDENTIFY PANEL AND CIRCUIT NUMBERS. NUMBER IN BOX REFERS TO THE CONDUCTOR AND CONDUIT SCHEDULE. FOR BRANCH WIRING USE #12 CONDUCTORS, EXCEPT #10 CONDUCTORS SHALL BE INSTALLED IF DISTANCES EXCEED THOSE SPECIFIED IN THE ELECTRICAL SPECIFICATIONS.
	LOW VOLTAGE WIRING: DIVIDE, MEDIUM LINE.
	CONDUIT STUB. DIMENSION RECORD DRAWINGS AND MARK.
1	CONDUCTOR & CONDUIT ("CC") SCHEDULE INDICATOR. REFER TO ONE-LINE DIAGRAM.
HC	ADA ACCESS PUSH PLATE
	JUNCTION BOX.
SP	JUNCTION BOX, SYSTEMS FURNITURE POWER CONNECTION.
	EARTH GROUND (ONE-LINE DIAGRAM).
C	JUNCTION BOX, CEILING.
	LADDER RACK.
	MECHANICAL EQUIPMENT CONNECTION. REFER TO EQUIPMENT SCHEDULE FOR REQUIREMENTS.

SYMBOLS LEGEND

SYMBOL	DESCRIPTION
WIRING DEVICES	
	RECEPTACLE, DUPLEX: NEMA 5-20R.
A	RECEPTACLE, DUPLEX, ABOVE COUNTER: NEMA 5-20R.
C	RECEPTACLE, DUPLEX, CEILING: NEMA 5-20R.
DF	RECEPTACLE, DUPLEX WITH GROUND FAULT CIRCUIT INTERRUPTER, DRINKING FOUNTAIN: CONCEAL WATER COOLER RECEPTACLE BEHIND WATER COOLER. SEE MECHANICAL/PLUMBING SHOP DRAWINGS FOR INSTALLATION REQUIREMENTS.
	RECEPTACLE, DUPLEX ON EMERGENCY POWER: NEMA 5-20R.
	RECEPTACLE, DUPLEX WITH GROUND FAULT CIRCUIT INTERRUPTER: NEMA 5-20R.
	RECEPTACLE, QUADRAPLEX: NEMA 5-20R.
	RECEPTACLE, QUADRAPLEX ON EMERGENCY POWER: NEMA 5-20R.
	RECEPTACLE, QUADRAPLEX WITH GROUND FAULT CIRCUIT INTERRUPTER: NEMA 5-20R.
	RECEPTACLE, SPECIAL PURPOSE. PROVIDE RECEPTACLE TO MATCH EQUIPMENT PLUG.
	RECEPTACLE, SPECIAL PURPOSE ON EMERGENCY POWER. PROVIDE RECEPTACLE TO MATCH EQUIPMENT PLUG.
	MULTI-OUTLET ASSEMBLY: NEMA 5-20R.
D	DROP CORD. SEE DETAIL.
FB#	FLUSH FLOOR BOX. "#" SHOWN ON DRAWINGS. REFER TO WIRING DEVICE SCHEDULE IN THE ELECTRICAL SPECIFICATIONS FOR CONFIGURATION AND DEVICES.
PT#	FLUSH FIRE RATED POKE THRU. "#" SHOWN ON DRAWINGS. REFER TO WIRING DEVICE SCHEDULE IN THE ELECTRICAL SPECIFICATIONS FOR CONFIGURATION AND DEVICES.
X $	SWITCH, SINGLE POLE ("x" INDICATES FIXTURES CONTROLLED).
X $3	SWITCH, THREE-WAY ("x" INDICATES FIXTURES CONTROLLED).
X $4	SWITCH, FOUR-WAY ("x" INDICATES FIXTURES CONTROLLED).
$T	SWITCH, TIMER OPERATED.
	RECEPTACLE, SINGLE PLEX, WITH USB OUTLET
LIGHTING	
(W-3)	FIXTURE IDENTIFICATION: (W-3) INDICATES FIXTURE TYPE AS SCHEDULED.
(W-3)	FIXTURE IDENTIFICATION, EMERGENCY WITH BATTERY PACK, CONNECTED TO GENERATOR AS INDICATED: (W-3) INDICATES FIXTURE TYPE AS SCHEDULED.
EM	EMERGENCY.
	EGRESS DIRECTION ARROW (EXIT SIGNS).
	EXIT SIGN: SINGLE FACE; CEILING MOUNTED
	EXIT SIGN: SINGLE FACE; WALL MOUNTED
	EXIT SIGN: DOUBLE FACE; CEILING MOUNTED
	EXIT SIGN: DOUBLE FACE; WALL MOUNTED
STRUCTURED CABLING	
X	TELEPHONE, WALL MOUNTED ("X" INDICATES QUANTITY OF CABLES).
	DATA CONNECTION: WIRELESS ACCESS POINT (WAP). REQUIRES (2) DATA DROPS PER DEVICE
W	TELEPHONE, WALL MOUNTED: WALL PHONE.
X	OUTLET, DATA COMMUNICATION ("X" INDICATES QUANTITY OF CABLES).
	OUTLET, BUILDING STANDARD COMBINATION TELEPHONE/ DATA COMMUNICATION.
	TWO-WAY EMERGENCY COMMUNICATION DEVICE PER IBC, WALL MOUNTED IN RECESSED BOX.
	TELEPHONE TERMINAL BOARD, FIRE TREATED PLYWOOD PAINTED.
	LAN RACK, FLOOR STANDING.

SYMBOLS LEGEND

SYMBOL	DESCRIPTION
ELECTRICAL POWER AND DISTRIBUTION	
	FUSE WITH RATING (ONE-LINE DIAGRAM).
	DISCONNECT, FUSED (ONE-LINE DIAGRAM).
	DISCONNECT, NONFUSED (ONE-LINE DIAGRAM).
	DISCONNECT WITH FUSE AND MOTOR STARTER COMBINATION (ONE-LINE DIAGRAM).
	OVERLOAD RELAY (ONE-LINE DIAGRAM).
	STARTER (ONE-LINE DIAGRAM).
	CIRCUIT BREAKER, MOLDED CASE (ONE-LINE DIAGRAM).
MCP	CIRCUIT BREAKER, MOTOR CIRCUIT PROTECTION (ONE-LINE DIAGRAM).
	CIRCUIT BREAKER, SOLID STATE (ONE-LINE DIAGRAM).
GFP	CIRCUIT BREAKER, SOLID STATE WITH GROUND FAULT PROTECTION (ONE-LINE DIAGRAM).
	TRANSFORMER (ONE-LINE DIAGRAM).
225/3 "1H"	PANELBOARD WITH MAIN LUGS ONLY. BUS SIZE AND PHASE AS SHOWN (ONE-LINE DIAGRAM).
225/3 "1H"	PANELBOARD WITH MAIN CIRCUIT BREAKER. SIZE AND PHASE AS SHOWN (ONE-LINE DIAGRAM).
225/3 "1H" 60/3	PANELBOARD WITH MAIN AND SUB FEED CIRCUIT BREAKER (ONE-LINE DIAGRAM).
225/3 "1H" 25/3	PANELBOARD WITH MAIN LUGS ONLY AND SURGE PROTECTION WITH CIRCUIT BREAKER (ONE-LINE DIAGRAM).
DMM	DIGITAL MULTIMETER (ONE-LINE DIAGRAM).
	DISCONNECT SWITCH, FUSED.
	DISCONNECT SWITCH, UNFUSED.
	STARTER, COMBINATION WITH DISCONNECT SWITCH.
	STARTER OR MOTOR CONTROLLER.
	PUSHBUTTON.
	PANELBOARD CABINET, FLUSH MOUNTED.
	PANELBOARD CABINET, SURFACE MOUNTED, 1 SECTION.
	PANELBOARD CABINET, SURFACE MOUNTED, 2 SECTION.
DP#__	DISTRIBUTION PANEL OR SWITCHBOARD.
LP	LIGHTING RELAY, CONTACTOR PANEL, OR DIMMING ENCLOSURE.

SYMBOLS LEGEND

SYMBOL	DESCRIPTION
LIGHTING CONTROL	
	OCCUPANCY SENSOR, DUAL TECHNOLOGY, OMNI-DIRECTIONAL, CEILING.
	OCCUPANCY SENSOR, DUAL TECHNOLOGY, WALL.
R	OCCUPANCY SENSOR CONTROL RELAY.
	VACANCY SENSOR, DUAL TECHNOLOGY, OMNI-DIRECTIONAL, CEILING.
	VACANCY SENSOR, DUAL TECHNOLOGY, WALL.
P	PHOTOCELL.
	SWITCH/OCCUPANCY SENSOR COMBO, DUAL TECHNOLOGY, WALL.
	SWITCH/VACANCY SENSOR COMBO, DUAL TECHNOLOGY, WALL.
	DIMMER SWITCH/OCCUPANCY SENSOR COMBO, DUAL TECHNOLOGY, WALL.
	DIMMER SWITCH/VACANCY SENSOR COMBO, DUAL TECHNOLOGY, WALL.
a,b	LOW VOLTAGE DIGITAL LIGHTING CONTROL SWITCH: LETTER "a,b" INDICATES ZONING WHERE SHOWN (REFER TO PLANS, SCHEDULES, AND DETAILS FOR EXACT BUTTON CONFIGURATION AND PROGRAMMING REQUIREMENTS)
DC	DIGITAL LIGHTING DIMMING CONTROLLER
RC	DIGITAL LIGHTING ROOM CONTROLLER
X	LIGHTING SPACE CONTROL TYPE. X INDICATES TYPE. SEE SCHEDULE / DIAGRAM.
FIRE ALARM	
FCP	FIRE ALARM CONTROL PANEL, SEMI-RECESSED.
CM	CONTROL MODULE.
MM	MONITOR MODULE.
P	FIRE ALARM MANUAL PULL STATION.
R	SHUT DOWN RELAY: INSTALL RELAY IN CONTROL CIRCUIT OF EQUIPMENT TO BE CONTROLLED IN THE EVENT OF A FIRE.
	DETECTOR, SMOKE.
	DETECTOR, SMOKE, DUCT WITH HOUSING AND SAMPLING TUBE.
	DETECTOR, HEAT.
	STROBE.
75	STROBE. SUBSCRIPT INDICATES CANDELA RATING.
	ALARM, HORN/STROBE, ONE ASSEMBLY.
75	ALARM, HORN/STROBE, ONE ASSEMBLY. SUBSCRIPT INDICATES CANDELA RATING.
	DETECTOR, FLOW SWITCH: FLOW SWITCHES SHALL BE PROVIDED AND INSTALLED WITH FIRE SPRINKLER SYSTEM AND SHALL BE CONNECTED TO LOCATIONS SHOWN ON THE FIRE SPRINKLER SHOP DRAWINGS.
	DETECTOR, TAMPER SWITCH WITH VALVE: TAMPER SWITCHES SHALL BE PROVIDED AND INSTALLED WITH FIRE SPRINKLER SYSTEM AND SHALL BE CONNECTED TO LOCATIONS SHOWN ON THE FIRE SPRINKLER SHOP DRAWINGS.
SD	SMOKE DAMPER.
FSD	FIRE AND SMOKE DAMPER.
75	ALARM, HORN/STROBE, ONE ASSEMBLY, CEILING MOUNTED. SUBSCRIPT INDICATES CANDELA RATING.
75	ALARM, HORN, CEILING MOUNTED. SUBSCRIPT INDICATES CANDELA RATING.
75	ALARM, STROBE, CEILING MOUNTED. SUBSCRIPT INDICATES CANDELA RATING.
SECURITY	
#1	CARD ACCESS DOOR TYPE #1 OR AS NOTED. SEE SCHEDULE.
CR	CARD READER.
	CCTV CAMERA/ENCLOSURE WITH LENS, TYPICAL. SEE SCHEDULE.

ARCH | NEXUS

Architectural NEXUS, Inc.
2505 East Parleys Way
Salt Lake City, UT 84109
T 801.924.5000
http://www.archnexus.com

Original drawings remain the property of the Architect and as such the Architect retains total ownership and control. The design represented by these drawings is sold to the client for a one time use, unless otherwise agreed upon in writing by the Architect. © Architectural Nexus, Inc. 2019

LICENSED PROFESSIONAL ENGINEER
No. 8182456
TYLER D. SQUIRE
STATE OF UTAH
4/13/2021

UNIVERSITY OF UTAH
WILLIAMS BLDG TIER 3 NETWORK NODE INTERFACE REMODEL
UNIVERSITY OF UTAH RESEARCH PARK, CHIPETA WAY
SALT LAKE CITY, UT

#	Date	Revision

PERMIT SET

NEXUS PROJECT #: 20101
CHECKED BY: TDS
DRAWN BY: DBS
DATE: 02.23.2020

AGENCY APPROVAL

SYMBOLS LEGEND

EE002

5/20/2021 3:44:21 PM

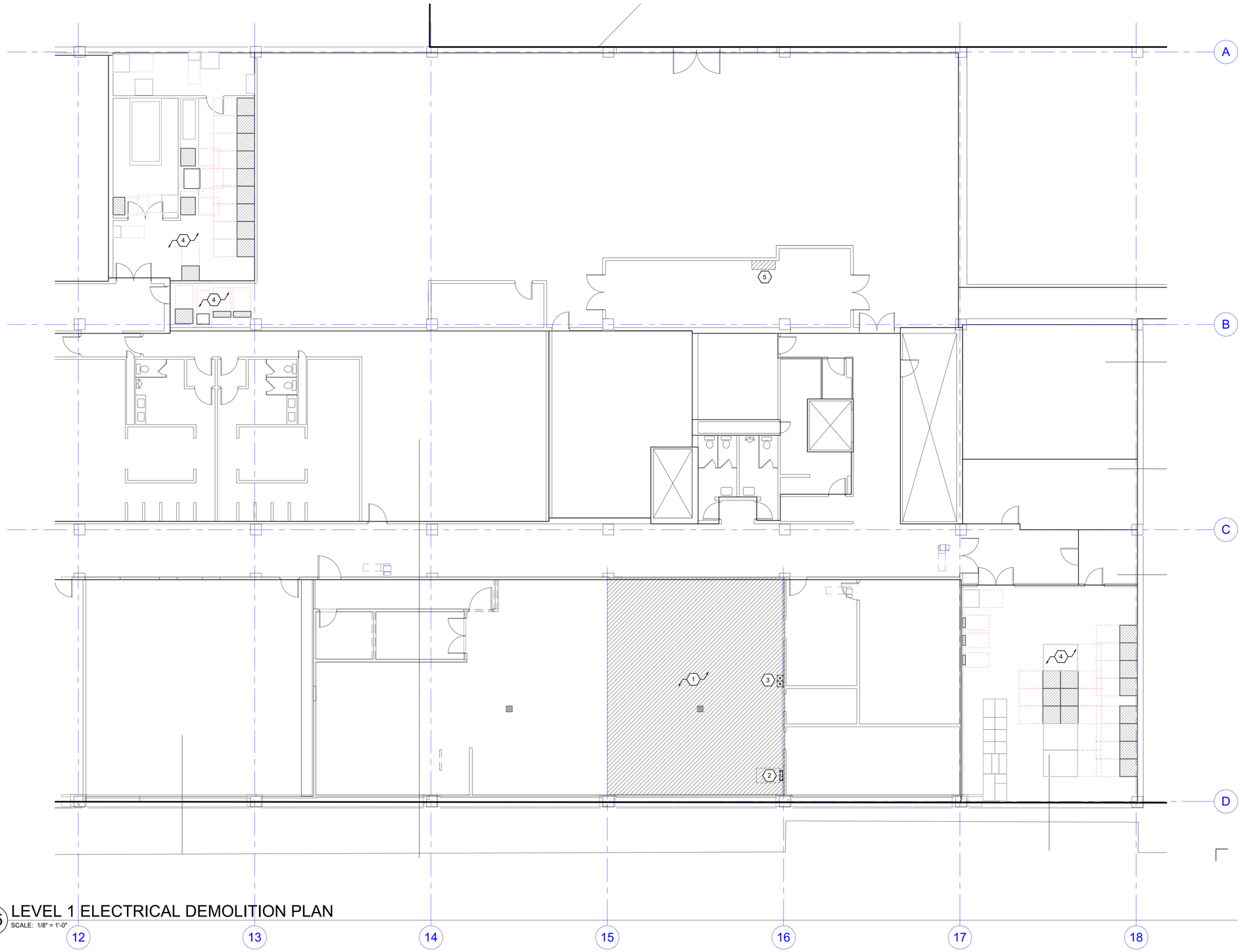

A5 LEVEL 1 ELECTRICAL DEMOLITION PLAN
SCALE: 1/8" = 1'-0"

5/20/2021 3:44:17 PM

GENERAL SHEET NOTES

1 PRIOR TO SUBMITTING BID, VISIT THE SITE AND FIELD VERIFY THE EXTENT OF ELECTRICAL DEMOLITION WORK TO MEET THE INTENT OF THE BID DOCUMENTS AND INCLUDE ALL COSTS IN BID.

2 PRIOR TO REMOVAL OF ANY ELECTRICAL EQUIPMENT OR WIRING, FIELD VERIFY THAT THE EQUIPMENT OR WIRING IS INACTIVE OR NO LONGER IN USE.

3 REMOVE ALL ABANDONED RACEWAY, CONDUIT, WIRING AND CABLING WHETHER ABANDONED PREVIOUS TO THIS PROJECT OR AS A RESULT OF THIS PROJECT. NOT ALL ABANDONED ITEMS ARE SHOWN ON THESE PLANS AND FIELD VERIFICATION OF DEMOLITION SCOPE EXTENT IS REQUIRED.

4 ALL HVAC UNITS TO BE REMOVED BY MECHANICAL CONTRACTOR UNLESS NOTED OTHERWISE. REMOVE ALL ASSOCIATED RACEWAYS AND CONDUCTORS BACK TO SOURCE.

5 ALL RACK OUTLETS ARE TO BE INSTALLED UNDERFLOOR USING LFMC, COLOR CODED PER SYSTEM AND TERMINATED IN CAST ALUMINUM BOXES. PROVIDE AN ADDITIONAL 3' OF SLACK TO ALLOW ADJUSTMENTS TO OUTLET LOCATIONS IF REQUIRED.

SHEET KEYNOTES

1 REMOVE ALL LIGHT FIXTURES, ELECTRICAL DEVICES AND FIRE ALARM DEVICES FROM HATCHED AREA. REMOVE CONDUIT AND WIRING BACK TO PANEL OF ORIGINATION UNLESS NOTED OTHERWISE IN THESE DRAWINGS.

2 REMOVE EXISTING PANELBOARD, FEEDER AND ELECTRICAL CIRCUITS.

3 EMERGENCY STOP BUTTONS TO BE REMOVED.

4 EXISTING TO REMAIN.

5 RELOCATE ONE EXISTING ELECTRICAL CONDUIT AND CIRCUIT IN THIS AREA TO MAKE ROOM FOR NEW PRE-ACTION SYSTEM CONTROL PANEL. PROVIDE A MINIMUM OF 30" WIDE CLEAR SPACE FOR NEW PANEL.

AGENCY APPROVAL

ARCH | NEXUS

Architectural NEXUS, Inc.
2505 East Parleys Way
Salt Lake City, UT 84109
T 801.924.5000
http://www.archnexus.com

Original drawings remain the property of the Architect and as such the Architect retains total ownership and control. The design represented by these drawings is sold to the client for a one time use, unless otherwise agreed upon in writing by the Architect.
© Architectural Nexus, Inc. 2019

LICENSED PROFESSIONAL ENGINEER
No. 8182456
TYLER D. SQUIRE
STATE OF UTAH
4/13/2021

UNIVERSITY OF UTAH
WILLIAMS BLDG TIER 3 NETWORK NODE INTERFACE REMODEL

UNIVERSITY OF UTAH RESEARCH PARK,
CHIPETA WAY
SALT LAKE CITY, UT

#	Date	Revision

PERMIT SET

NEXUS PROJECT #: 20101
CHECKED BY: TDS
DRAWN BY: DBS
DATE: 02.23.2020

LEVEL 1 ELECTRICAL DEMOLITION PLAN

ED101

GENERAL SHEET NOTES

1 VERIFY RACK OUTLET TYPES WITH THE UNIVERSITY IT DEPARTMENT PRIOR TO INSTALLATION.

2 COLOR CODE ALL EQUIPMENT AND CIRCUITS AS TO THE POWER SYSTEM IT IS SERVED FROM. THIS INCLUDES DISTRIBUTION GEAR, CONDUITS, NAMETAGS, AND WIRING DEVICE LABELS. REFER TO COLOR SCHEME CHART.

3 MINIMUM BRANCH CIRCUIT CONDUCTOR SIZE SHALL BE #10 AWG, THWN-2 COPPER FOR ALL RACK OUTLETS AND EQUIPMENT, UNLESS A LARGER SIZE IS INDICATED.

4 LABEL ALL OUTLETS WITH THE PANEL AND CIRCUIT SERVING THE OUTLET.

5 ALL RACK OUTLETS ARE TO BE INSTALLED UNDERFLOOR USING LFMC, COLOR CODED PER SYSTEM AND TERMINATED IN CAST ALUMINUM BOXES. PROVIDE AN ADDITIONAL 3' OF SLAC TO ALLOW ADJUSTMENTS TO OUTLET LOCATIONS IF REQUIRED.

SHEET KEYNOTES

1 EXISTING CATERPILLAR GENERATORS ARE TO BE SERVICED AND REFRESHED INCLUDING CHANGING ALL FLUIDS, FULL ENGINE INSPECTION AND RE-TESTING TO FACTORY STANDARDS. GENERATOR IS TO BE RE-RATED FOR PRIME POWER USAGE.

ARCH | NEXUS

Architectural NEXUS, Inc.
2505 East Parleys Way
Salt Lake City, UT 84109
T 801.924.5000
http://www.archnexus.com

Original drawings remain the property of the Architect and as such the Architect retains total ownership and control. The design represented by these drawings is sold to the client for a one time use, unless otherwise agreed upon in writing by the Architect. © Architectural Nexus, Inc. 2019

LICENSED PROFESSIONAL ENGINEER
No. 8182456
TYLER EQUIRE
STATE OF UTAH
4/13/2021

UNIVERSITY OF UTAH
WILLIAMS BLDG TIER 3 NETWORK
NODE INTERFACE REMODEL

UNIVERSITY OF UTAH RESEARCH PARK,
CHIPETA WAY
SALT LAKE CITY, UT

#	Date	Revision

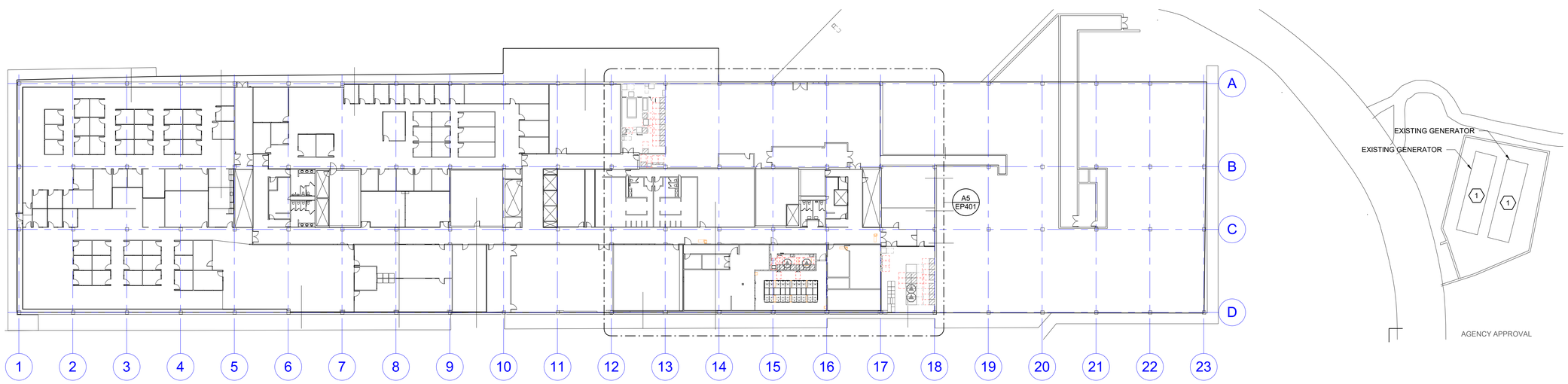

A5 LEVEL 1 OVERALL POWER PLAN
SCALE: 1" = 30'-0"

5/20/2021 3:44:32 PM

PERMIT SET

NEXUS PROJECT #: 20101
CHECKED BY: TDS
DRAWN BY: DBS
DATE: 02.23.2020

OVERALL LEVEL 1 POWER PLAN

EP101

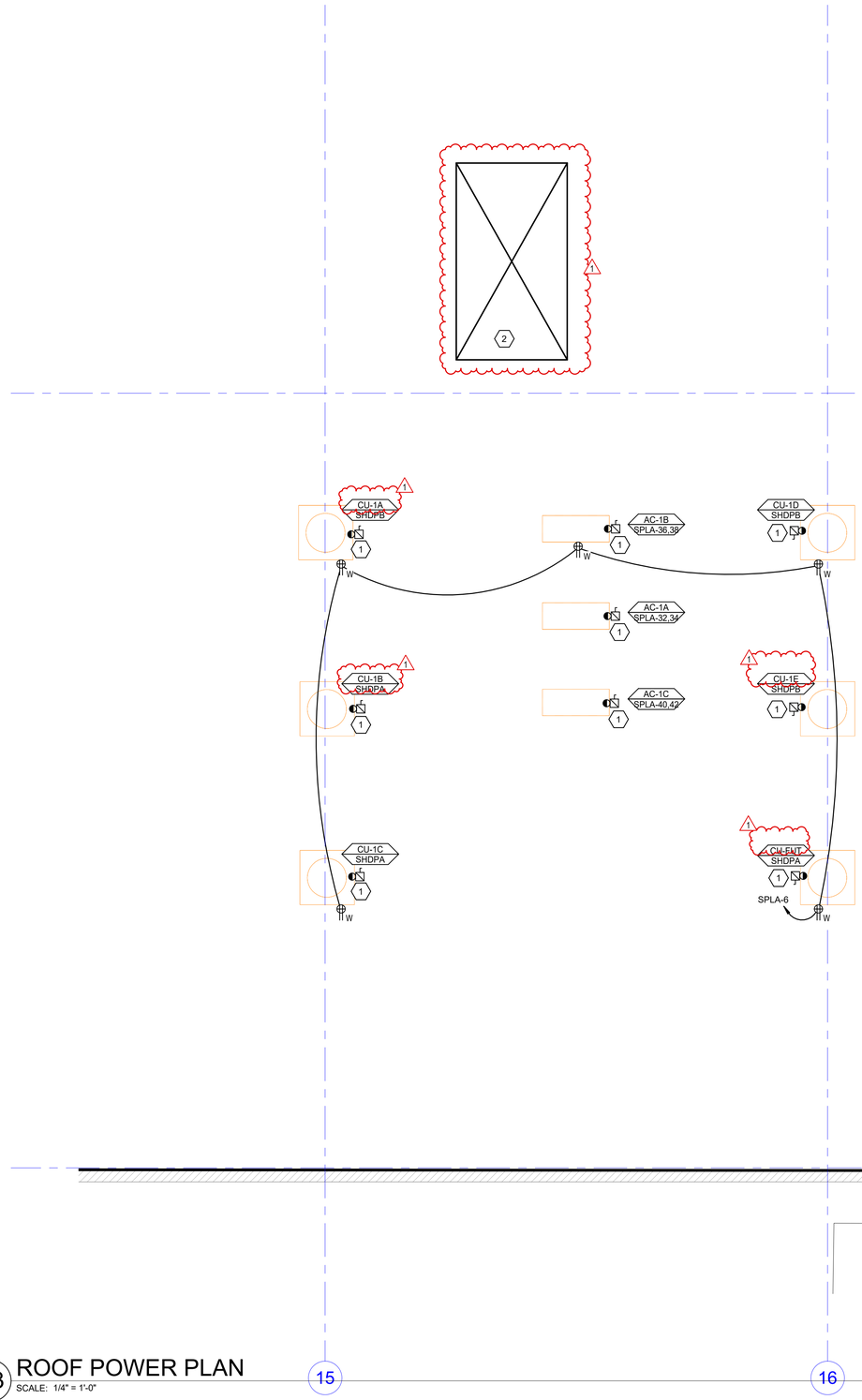

A3 ROOF POWER PLAN
SCALE: 1/4" = 1'-0"

GENERAL SHEET NOTES

1 VERIFY RACK OUTLET TYPES WITH THE UNIVERSITY IT DEPARTMENT PRIOR TO INSTALLATION.

2 COLOR CODE ALL EQUIPMENT AND CIRCUITS AS TO THE POWER SYSTEM IT IS SERVED FROM. THIS INCLUDES DISTRIBUTION GEAR, CONDUITS, NAMETAGS, AND WIRING DEVICE LABELS. REFER TO COLOR SCHEME CHART.

3 MINIMUM BRANCH CIRCUIT CONDUCTOR SIZE SHALL BE #10 AWG, THWN-2 COPPER FOR ALL RACK OUTLETS AND EQUIPMENT, UNLESS A LARGER SIZE IS INDICATED.

4 LABEL ALL OUTLETS WITH THE PANEL AND CIRCUIT SERVING THE OUTLET.

5 ALL RACK OUTLETS ARE TO BE INSTALLED UNDERFLOOR USING LFMC, COLOR CODED PER SYSTEM AND TERMINATED IN CAST ALUMINUM BOXES. PROVIDE AN ADDITIONAL 3' OF SLAC TO ALLOW ADJUSTMENTS TO OUTLET LOCATIONS IF REQUIRED.

SHEET KEYNOTES

1 ROUTE ELECTRICAL CONDUIT FOR ROOFTOP EQUIPMENT IN THE MECHANICAL SHAFT ADJACENT TO NEW MECHANICAL PIPING. REFER TO MECHANICAL PLANS FOR PATHWAY INFORMATION.

2 MECHANICAL SHAFT FOR CONDUIT AND REFRIGERANT LINES TO BE RUN TO THE DATA CENTER BELOW. FIELD VERIFY EXACT LOCATIONS.

AGENCY APPROVAL

ARCH | NEXUS
Architectural NEXUS, Inc.
2505 East Parleys Way
Salt Lake City, UT 84109
T 801.924.5000
http://www.archnexus.com

Original drawings remain the property of the Architect and as such the Architect retains total ownership and control. The design represented by these drawings is sold to the client for a one time use, unless otherwise agreed upon in writing by the Architect.
© Architectural Nexus, Inc. 2019

LICENSED PROFESSIONAL ENGINEER
No. 8182456
TYLER D. SQUIRE
STATE OF UTAH
4/13/2021

UNIVERSITY OF UTAH
WILLIAMS BLDG TIER 3 NETWORK NODE INTERFACE REMODEL
UNIVERSITY OF UTAH RESEARCH PARK, CHIPETA WAY
SALT LAKE CITY, UT

#	Date	Revision
1	5/21/21	Permit Review Comments

PERMIT SET

NEXUS PROJECT #: 20101
CHECKED BY: TDS
DRAWN BY: DBS
DATE: 02.23.2020

PARTIAL ROOF POWER PLAN

EP102

5/20/2021 3:44:35 PM

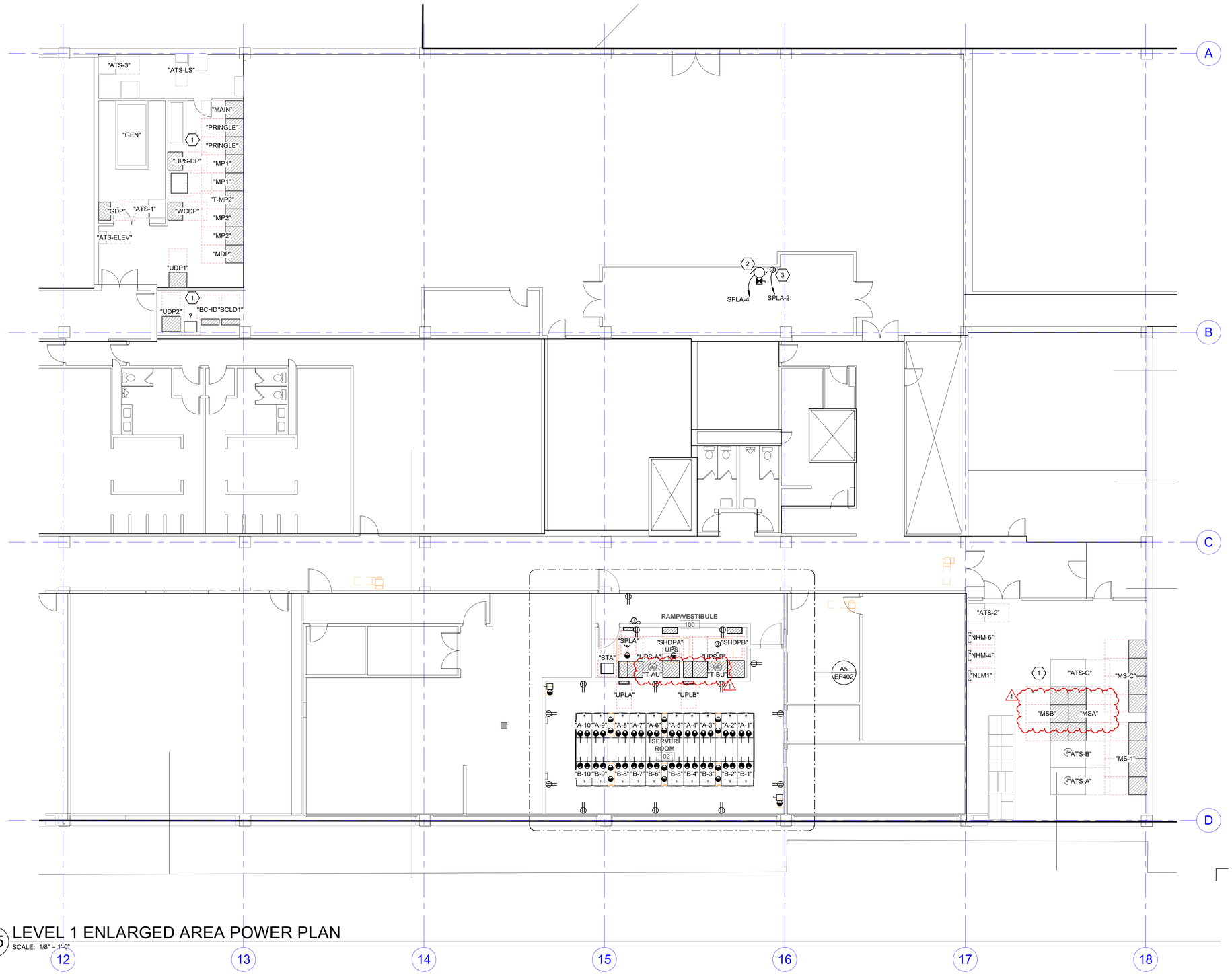

A5 LEVEL 1 ENLARGED AREA POWER PLAN
SCALE: 1/8" = 1'-0"

5/20/2021 3:44:39 PM

GENERAL SHEET NOTES

1 VERIFY RACK OUTLET TYPES WITH THE UNIVERSITY IT DEPARTMENT PRIOR TO INSTALLATION.

2 COLOR CODE ALL EQUIPMENT AND CIRCUITS AS TO THE POWER SYSTEM IT IS SERVED FROM. THIS INCLUDES DISTRIBUTION GEAR, CONDUITS, NAMETAGS, AND WIRING DEVICE LABELS. REFER TO COLOR SCHEME CHART.

3 MINIMUM BRANCH CIRCUIT CONDUCTOR SIZE SHALL BE #10 AWG, THWN-2 COPPER FOR ALL RACK OUTLETS AND EQUIPMENT, UNLESS A LARGER SIZE IS INDICATED.

4 LABEL ALL OUTLETS WITH THE PANEL AND CIRCUIT SERVING THE OUTLET.

5 ALL RACK OUTLETS ARE TO BE INSTALLED UNDERFLOOR USING LFMC, COLOR CODED PER SYSTEM AND TERMINATED IN CAST ALUMINUM BOXES. PROVIDE AN ADDITIONAL 3' OF SLAC TO ALLOW ADJUSTMENTS TO OUTLET LOCATIONS IF REQUIRED.

SHEET KEYNOTES

1 ALL ELECTRICAL EQUIPMENT IN THIS ROOM IS EXISTING TO REMAIN.

2 FIRE SPRINKLER COMPRESSOR. 120V, 1/2 HP. PROVIDE ELECTRICAL CONNECTIONS.

3 FIRE SPRINKLER PRE-ACTION AND RELEASING PANEL. PROVIDE 120V CONNECTIONS.

AGENCY APPROVAL

ARCH | NEXUS

Architectural NEXUS, Inc.
2505 East Parleys Way
Salt Lake City, UT 84109
T 801.924.5000
http://www.archnexus.com

Original drawings remain the property of the Architect and as such the Architect retains total ownership and control. The design represented by these drawings is sold to the client for a one time use, unless otherwise agreed upon in writing by the Architect.
© Architectural Nexus, Inc. 2019

LICENSED PROFESSIONAL ENGINEER
No. 8182456
TYLER M. SQUIRE
STATE OF UTAH
4/13/2021

UNIVERSITY OF UTAH
WILLIAMS BLDG TIER 3 NETWORK NODE INTERFACE REMODEL
UNIVERSITY OF UTAH RESEARCH PARK, CHIPETA WAY
SALT LAKE CITY, UT

#	Date	Revision
1	5/21/21	Permit Review Comments

PERMIT SET

NEXUS PROJECT #: 20101
CHECKED BY: TDS
DRAWN BY: DBS
DATE: 02.23.2020

ENLARGED AREA POWER PLAN

EP401

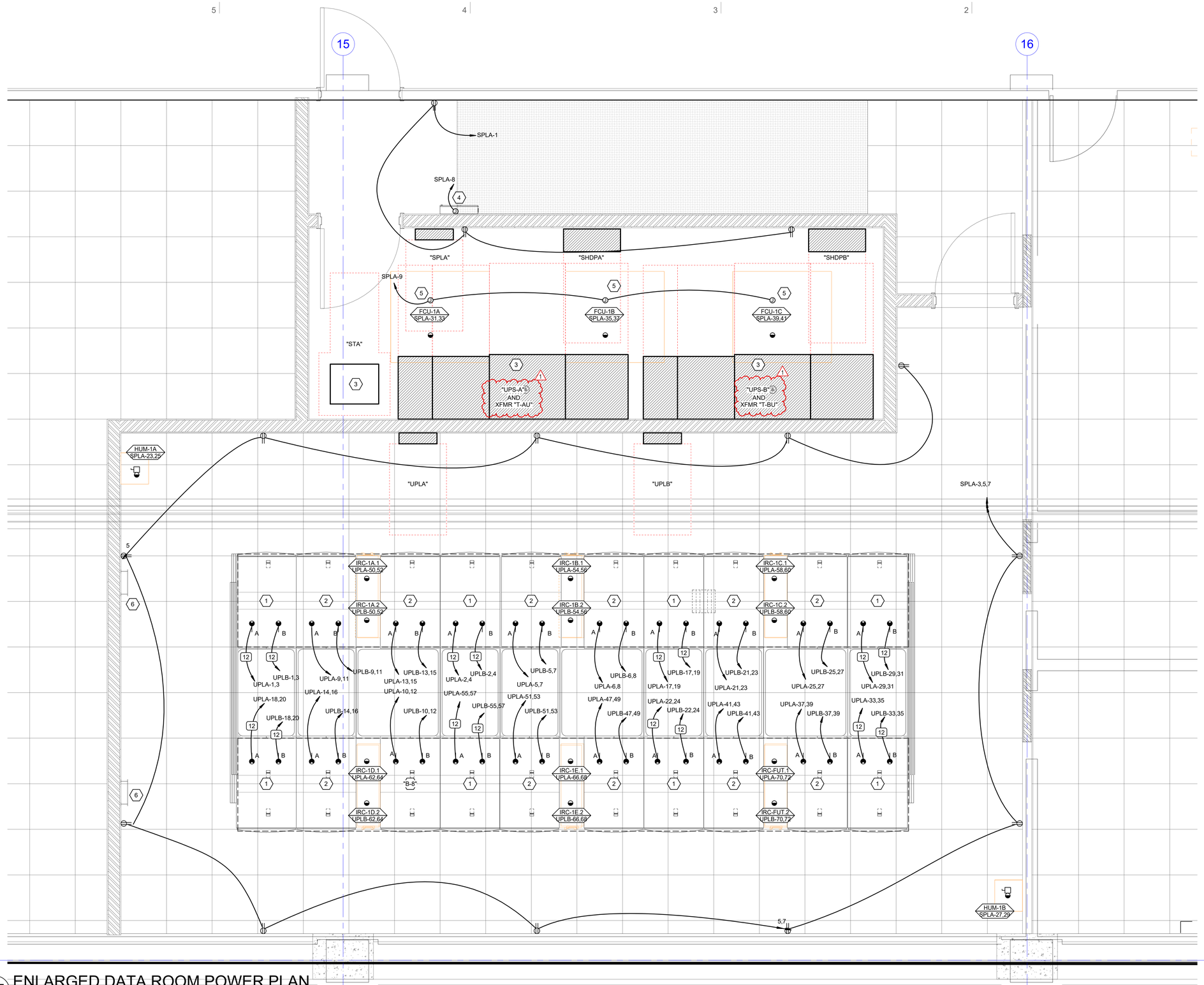

A5 ENLARGED DATA ROOM POWER PLAN

SCALE: 1/2" = 1'-0"

5/20/2021 3:44:44 PM

GENERAL SHEET NOTES

1. VERIFY RACK OUTLET TYPES WITH THE UNIVERSITY IT DEPARTMENT PRIOR TO INSTALLATION.
2. COLOR CODE ALL EQUIPMENT AND CIRCUITS AS TO THE POWER SYSTEM IT IS SERVED FROM. THIS INCLUDES DISTRIBUTION GEAR, CONDUITS, NAMETAGS, AND WIRING DEVICE LABELS. REFER TO COLOR SCHEME CHART.
3. MINIMUM BRANCH CIRCUIT CONDUCTOR SIZE SHALL BE #10 AWG, THWN-2 COPPER FOR ALL RACK OUTLETS AND EQUIPMENT, UNLESS A LARGER SIZE IS INDICATED.
4. LABEL ALL OUTLETS WITH THE PANEL AND CIRCUIT SERVING THE OUTLET.
5. ALL RACK OUTLETS ARE TO BE INSTALLED UNDERFLOOR USING LFMC, COLOR CODED PER SYSTEM AND TERMINATED IN CAST ALUMINUM BOXES. PROVIDE AN ADDITIONAL 3' OF SLAC TO ALLOW ADJUSTMENTS TO OUTLET LOCATIONS IF REQUIRED.

SHEET KEYNOTES

1. PROVIDE 60A/3-PHASE ELECTRICAL CONNECTIONS (A & B LEGS) TO THIS RACK.
2. PROVIDE 30A/3-PHASE ELECTRICAL CONNECTIONS (A & B LEGS) TO THIS RACK.
3. PROVIDE 3" CONCRETE PAD FOR NEW UPS UNITS, TRANSFORMER AND ANY OTHER FLOOR MOUNTED ELECTRICAL EQUIPMENT.
4. VESDA SMOKE DETECTION PANEL. PROVIDE 120V CONNECTIONS.
5. PROVIDE ELECTRICAL CONNECTIONS TO CONDENSATE PUMPS. COORDINATE EXACT LOCATIONS AND REQUIREMENTS WITH MECHANICAL INSTALLERS.
6. PROVIDE #3/0 CU GROUNDING CONDUCTOR TO MAIN SWITCHBOARD MS-1 OR TO EXISTING GROUNDING BUS BAR ADJACENT TO MS-1.

AGENCY APPROVAL

ARCH | NEXUS

Architectural NEXUS, Inc.
2505 East Parleys Way
Salt Lake City, UT 84109
T 801.924.5000
http://www.archnexus.com

Original drawings remain the property of the Architect and as such the Architect retains total ownership and control. The design represented by these drawings is sold to the client for a one time use, unless otherwise agreed upon in writing by the Architect. © Architectural Nexus, Inc. 2019

LICENSED PROFESSIONAL ENGINEER
No. 8182456
TYLER M. SQUIRE
STATE OF UTAH
4/13/2021

UNIVERSITY OF UTAH

WILLIAMS BLDG TIER 3 NETWORK NODE INTERFACE REMODEL

UNIVERSITY OF UTAH RESEARCH PARK, CHIPETA WAY
SALT LAKE CITY, UT

#	Date	Revision
1	5/21/21	Permit Review Comments

PERMIT SET

NEXUS PROJECT #: 20101
CHECKED BY: TDS
DRAWN BY: DBS
DATE: 02.23.2020

ENLARGED DATA ROOM POWER PLAN

EP402

METHOD OF PROCEDURE (MOP REQUIREMENTS)

FOR EACH CONDITION THAT REQUIRES AN OUTAGE TO A LOAD OR BUILDING IN ORDER TO DEMOLISH EXISTING EQUIPMENT AND/OR INSTALL NEW EQUIPMENT, PROVIDE A DETAILED MOP FOR REVIEW AND APPROVAL THAT DESCRIBES THE WORK AS FOLLOWS:

1. INCLUDE THE FOLLOWING IN THE MOP:
   a. NAMES AND CONTACT INFORMATION OF ALL PERSONS TO BE INVOLVED IN THE PROCEDURE.
   b. PRELIMINARY CHECKLIST OF TOOLS AND EQUIPMENT REQUIRED.
   c. SAFETY MEASURES AND PRECAUTIONS TO BE TAKEN.
   d. LIST OF BUILDING(S) OR LOADS(S) TO BE AFFECTED.
   e. LIST OF EQUIPMENT TO BE OPERATED.
   f. RISKS TO PEOPLE, BUILDINGS AND EQUIPMENT.
   g. ESTIMATED START TIME AND DATE, WITH ESTIMATED ELAPSED TIME FOR EACH STEP, AND TOTAL TIME FOR SYSTEM TO RETURN TO NORMAL.
   h. APPROVALS OR NOTIFICATIONS REQUIRED IMMEDIATELY PRIOR TO COMMENCING WORK.
   i. EMERGENCY CONTACT LIST.
   j. TEMPORARY POWER REQUIRED.
   k. SWITCHING SEQUENCE TO SECTIONALIZE PORTIONS OF CAMPUS AND/OR REFEED FROM OTHER PORTIONS OF THE ELECTRICAL SYSTEM.
   l. STEP-BY-STEP PROCEDURES TO BE FOLLOWED.
   m. BACK-OUT PROCEDURES IN CASE OF UNEXPECTED SITUATIONS.
   n. ALL STEPS AND CHECKLIST ITEMS TO HAVE AN EMPTY CHECK-BOX TO BE FILLED IN WHEN THE PROCEDURE IS PERFORMED.
   o. SIGNATURE ACCEPTANCE LINES FOR REPRESENTATIVES FROM THE ELECTRICAL CONTRACTOR, U OF U, DFCM, CMGC AND THE ENGINEERS.
2. SUBMIT THE MOP TO OWNER/ENGINEER FOR REVIEW AND ACCEPTANCE.
3. SCHEDULE THE SHUTDOWN WORK ONLY AFTER THE MOP HAS BEEN ACCEPTED AND SIGNED BY ALL PARTIES.
4. AT TIME OF PROCEDURE, HAVE COPIES OF MOP ON SITE AND DESIGNATE INDIVIDUAL TO ""CHECK"" EACH STEP AS IT IS PERFORMED.

BRANCH CIRCUIT CONDUCTOR AND CONDUIT SIZING TABLE

CIRCUIT AMPACITY/VOLTAGE	CIRCUIT LENGTH	CONDUCTOR SIZE (PHASE, NEUTRAL AND GR)	CONDUIT SIZE
20A/120V	0' - 60'	#12 AWG	0.75" Ø
20A/120V	60' - 95'	#10 AWG	0.75" Ø
20A/120V	95' - 150'	#8 AWG	1" Ø
20A/120V	150' - 240'	#6 AWG	1.25" Ø
20A/277V	0' - 140'	#12 AWG	0.75" Ø
20A/277V	140' - 220'	#10 AWG	0.75" Ø
20A/277V	220' - 350'	#8 AWG	1" Ø
20A/277V	350' - 550'	#6 AWG	1.25" Ø

NOTES:

1. WIRE SIZING IS BASED ON COPPER CONDUCTORS SUPPLYING A 20A, 120V CIRCUIT AT THE INDICATED VOLTAGE, ASSUMED TO BE 80% LOADED (16A), WITH MAXIMUM VOLTAGE DROP OF 3% AT THE LOAD.
2. DOWN-SIZED WIRE AT DEVICE/LOAD AS REQUIRED AND TERMINATE CONDUCTORS IN A SAFE AND CODE COMPLIANT MANNER.
3. CONDUIT SIZE IS BASED ON A MAXIMUM OF 3 CIRCUITS PER CONDUIT, EACH WITH A SEPARATE NEUTRAL CONDUCTOR.

EQUIPMENT NAMEPLATE SCHEDULE

EQUIPMENT ID SCHEME	FIRST DIGIT - BUILDING LEVEL (0, 1, 2, ETC) SECOND DIGIT - PANEL TYPE M - MECHANICAL H - (277/480) L - (120/208) E - EMERGENCY S - STANDBY Q - EQUIPMENT U - UPS K - KITCHEN (120/208) THIRD DIGIT - BUILDING AREA (A, B, C, ETC) FOURTH DIGIT - SEQUENCE # (1,2,3,...)
LABEL FORMAT	[NAME] [SYSTEM] [VOLTAGE] [FED FROM] [SOURSE(S)]
LABEL EXAMPLE	PANEL "4LA1" STANDBY POWER 120/208V FED FROM BUS-A / XFMR 4TA
BUSWAY	LABEL BUSWAY EVERY 6' WHERE EXPOSED TO VIEW AND EVERY 15' WHERE NOT EXPOSED TO VIEW
OTHER	

COLOR SCHEME

SYSTEM	EQUIPMENT	NAMEPLATE COLOR TEXT	NAMEPLATE COLOR BACKGROUND
NORMAL POWER	ALL GEAR NOT INCLUDED BELOW	WHITE	BLACK
STANDBY POWER "A"	ATS-SA AND ALL DOWNSREAM GEAR, EXCEPT UPS GEAR AS NOTED	BLUE	WHITE
STANDBY POWER "B"	ATS-SB AND ALL DOWNSREAM GEAR, EXCEPT UPS GEAR AS NOTED	ORANGE	WHITE
EMERGENCY POWER	GDP1, GDP2, ATS-E AND ALL DOWNSTREAM GEAR	WHITE	RED
LEGALLY-REQUIRED STANDBY POWER	ATS-S AND ALL DOWNSTREAM GEAR	RED	WHITE
UPS "A" POWER	UPSA AND ALL DOWNSTREAM GEAR	WHITE	BLUE
UPS "B" POWER	UPSB AND ALL DOWNSTREAM GEAR	BLACK	YELLOW

FAULT CURRENT TABLE

BUS	FAULT CURRENT
SHDPA	31427
SHDPB	37427
SPLA	10000
UPLA	23868
UPLB	23868
UPS-A	30641
UPS-B	30641

PROVIDE FULLY RATED CIRCUIT BREAKERS IN PANELBOARDS FOR THE FAULT CURRENT SHOWN. SERIES RATINGS WITH NEXT LEVEL UPSTREAM OVERCURRENT PROTECTIVE DEVICES ARE PERMITTED SUBJECT TO FACTORY UL DOCUMENTATION OF SERIES RATING SUBMITTED TO ENGINEER. IF DEVICE OR EQUIPMENT FAULT CURRENT RATING IS NOT SHOWN, ASSUME 100,000 AIC.

COPPER CONDUCTOR AND CONDUIT SCHEDULE

SCHEDULE NUMBER
SUBSCRIPT (NOTE 5) (E.G. 5 IG)

SYM	AMP	HH AMPS	CONDUIT SIZE	CONDUCTOR (NOTE 1) QTY	SIZE	G	IG/HH	SE	NOTES
1	20	-	.75	2	12	12	12	8	2
2	20	-	.75	3	12	12	12	8	2,3
3	20	24	.75	4	12	12	12	8	2,3
4	30	-	.75	2	10	10	10	8	2
5	30	-	.75	3	10	10	10	8	2
6	30	32	.75	4	10	10	10	8	2
7	40	-	1	2	8	10	8	6	2
8	40	-	1	3	8	10	8	6	2
9	40	44	1	4	8	10	8	6	2
10	55	-	1	2	6	10	8	4	2
11	55	-	1	3	6	10	8	4	2
12	55	60	1.25	4	6	10	8	4	2
13	70	-	1	2	4	8	4	2	2
14	70	-	1.25	3	4	8	4	2	2
15	70	76	1.25	4	4	8	4	2	2
16	85	-	1.25	2	3	8	3	2	2
17	85	-	1.25	3	3	8	3	2	2
18	85	92	1.25	4	3	8	3	2	2
19	95	-	1.25	3	2	8	2	2	2
20	95	104	1.50	4	2	8	2	2	2
21	130	-	1.50	3	1	6	2	2	2
22	130	116	1.50	4	1	6	2	2	2
23	150	-	2	3	1/0	6	2	1/0	2
24	150	136	2	4	1/0	6	2	1/0	2
25	175	-	2	3	2/0	6	2	2/0	2
26	175	156	2	4	2/0	6	2	2/0	2
27	200	-	2	3	3/0	6	2	2/0	2
28	200	180	2.50	4	3/0	6	2	2/0	2
29	230	-	2.50	3	4/0	4	2	2/0	2
30	230	208	2.50	4	4/0	4	2	2/0	2
31	255	-	2.50	3	250	4	1	2/0	2
32	255	232	2.50	4	250	4	1	2/0	2
33	310	-	3	3	350	3	1/0	3/0	2
34	310	280	3	4	350	3	1/0	3/0	2
35	380	-	3.50	3	500	3	3/0	3/0	2
36	380	344	4	4	500	3	3/0	3/0	2
37	400	-	2 EA 2	3	3/0	3	3/0	3/0	2
38	400	360	2 EA 2.50	4	3/0	3	3/0	3/0	2
39	510	-	2 EA 2.50	3	250	1	4/0	3/0	2
40	510	464	2 EA 3	4	250	1	4/0	3/0	2
41	620	-	2 EA 3	3	350	1/0	4/0	3/0	2,4
42	620	560	2 EA 3	4	350	1/0	4/0	3/0	2,4
43	760	-	2 EA 3.50	3	500	1/0	4/0	3/0	2,4
44	760	688	2 EA 4	4	500	1/0	4/0	3/0	2,4
45	855	-	3 EA 3	3	300	2/0	4/0	3/0	2,4
46	855	768	3 EA 3	4	300	2/0	4/0	3/0	2,4
47	1000	-	3 EA 3.50	3	400	2/0	4/0	3/0	4
48	1000	912	3 EA 3.50	4	400	2/0	4/0	3/0	4
49	1140	-	3 EA 4	3	500	3/0	4/0	3/0	4
50	1140	1032	3 EA 4	4	500	3/0	4/0	3/0	4
51	1240	-	4 EA 3	3	350	3/0	4/0	3/0	4
52	1240	1120	4 EA 3	4	350	3/0	4/0	3/0	4
53	1675	1520	5 EA 4	4	400	4/0	4/0	4/0	4
54	2010	1824	6 EA 4	4	400	250	250	250	4
55	2660	2408	7 EA 4	4	500	350	350	350	4
56	3040	2752	8 EA 4	4	500	500	500	500	4
57	4180	3784	11 EA 4	4	500	500	500	500	4
58	-	-	5 EA 4	-	-	-	-	-	6
59	-	-	5	-	-	-	-	-	6
60	-	-	10 EA 4	-	-	-	-	-	6

CONDUIT AND CONDUCTOR SCHEDULE NOTES

1. CONDUCTORS SHOWN ARE SHOWN FOR EACH CONDUIT WITH MODIFICATIONS AS NOTED IN NOTE 5. ALL CONDUCTORS SHOWN ARE THWN UNLESS OTHERWISE NOTED.
2. PROVIDE EQUIPMENT GROUND CONDUCTORS PER TABLE 250-122 WHEN CIRCUIT BREAKERS ARE SIZED GREATER THAN AMPERE RATING SHOWN IN TABLE.
3. PROVIDE #10 NEUTRALS FOR MULTIWIRE BRANCH CIRCUITS SERVING COMPUTERS.
4. GROUND (G) CONDUCTOR MAY BE DELETED ON SERVICE ENTRANCE CONDUCTORS.
5. SYMBOL SUBSCRIPTS:
   "2N": INCLUDE TWO NEUTRAL CONDUCTORS SIZED AS SCHEDULED FOR PHASE AND NEUTRAL CONDUCTORS WHERE THE CONDUCTOR IS #1/0 OR LARGER. INCLUDE A SINGLE 200% RATED CONDUCTOR THAT IS TWICE THE AMPACITY OF THE SCHEDULED PHASE AND NEUTRAL CONDUCTOR WHERE THE CONDCUTOR IS BELOW #1/0 IN SIZE.
   "FG": FULL SIZE GROUND, SIZE EQUIPMENT GROUNDING CONDUCTOR TO BE SAME SIZE AS THE PHASE CONDUCTORS.
   "HH": NEUTRAL CURRENTS EXIST DUE TO HIGH HARMONIC "NONLINEAR" LOADS. CURRENT CARRYING CONDUCTORS DERATED ACCORDINGLY. PROVIDE THE IG/HH SIZE FOR THE EQUIPMENT GROUNDING CONDUCTOR.
   "IG": INCLUDE IG (INSULATED/ISOLATED GROUND CONDUCTOR) SCHEDULED ALONG WITH THE GROUND OF EQUIPMENT GROUND CONDUCTOR.
   "SE": SUBSTITUTE "SE" CONDUCTOR FOR "G" CONDUCTOR SHOWN, WHICH IS SIZED FOR THE GROUNDING OF THE SECONDARY OF THE SEPARATELY DERIVED SYSTEM.
6. RACEWAY ONLY. CONDUCTORS PROVIDED BY UTILITY.

GENERAL SHEET NOTES

1. PROVIDE NEMA 3R ENCLOSURES FOR EQUIPMENT LOCATED OUTDOORS. REFER TO PLANS FOR EQUIPMENT LOCATIONS.
2. REFER TO PLANS FOR CONSTRAINTS ON PHYSICAL DIMENSIONS AND CLEARANCE REQUIREMENTS OF EQUIPMENT. PROVIDE EQUIPMENT DIMENSIONS THAT FALL WITHIN THE CONSTRAINTS OF EACH SPECIFIC LOCATION.
3. ALL EQUIPMENT SHALL BE CONSTRUCTED AND BRACED FOR THE SEISMIC CONDITIONS OF THE PROJECT. REFER TO ELECTRICAL SPECIFICATIONS FOR REQUIREMENTS.
4. PROVIDE PERFORMANCE TESTING FOR GROUND-FAULT PROTECTION SYSTEMS ON SITE WITH A WRITTEN RECORD OF THIS TEST SUBMITTED TO THE AUTHORITY HAVING JURISDICTION PER NEC 230.95(C).
5. MAXIMUM ALLOWABLE VOLTAGE DROP ACROSS THE COMBINATION OF FEEDERS AND BRANCH CIRCUITS IS 5%. REFER TO CONDUTOR SIZING TABLE ON THIS SHEET.

SHEET KEYNOTES

ARCH | NEXUS
Architectural NEXUS, Inc.
2505 East Parleys Way
Salt Lake City, UT 84109
T 801.924.5000
http://www.archnexus.com

Original drawings remain the property of the Architect and as such the Architect retains total ownership and control. The design represented by these drawings is sold to the client for a one time use, unless otherwise agreed upon in writing by the Architect. © Architectural Nexus, Inc. 2019

LICENSED PROFESSIONAL ENGINEER
No. 8182456
TYLER M. SQUIRE
STATE OF UTAH
4/13/2021

UNIVERSITY OF UTAH
WILLIAMS BLDG TIER 3 NETWORK NODE INTERFACE REMODEL
UNIVERSITY OF UTAH RESEARCH PARK, CHIPETA WAY
SALT LAKE CITY, UT

#	Date	Revision
1	5/21/21	Permit Review Comments

PERMIT SET

NEXUS PROJECT #: 20101
CHECKED BY: TDS
DRAWN BY: DBS
DATE: 02.23.2020

AGENCY APPROVAL

ONE-LINE DIAGRAM SCHEDULES AND NOTES

EP600

5/20/2021 3:44:50 PM

WILLIAMS BUILDING SERVICE #2

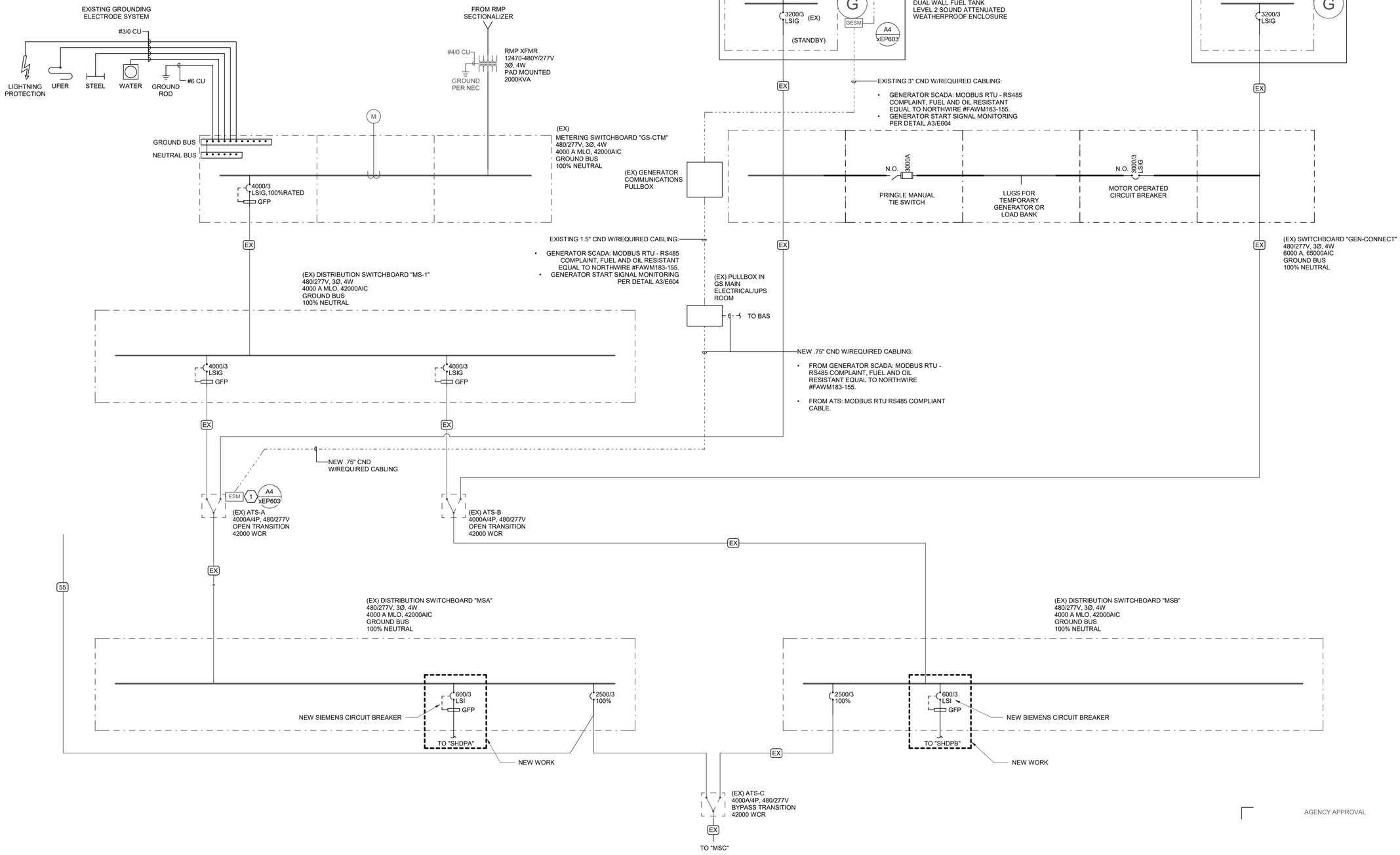

A3 ONE-LINE DIAGRAM - EXISTING
SCALE: NTS

5/20/2021 3:44:58 PM

ARCH | NEXUS

Architectural NEXUS, Inc.
2505 East Parleys Way
Salt Lake City, UT 84109
T 801.924.5000
http://www.archnexus.com

Original drawings remain the property of the Architect and as such the Architect retains total ownership and control. The design represented by these drawings is sold to the client for a one time use, unless otherwise agreed upon in writing by the Architect. © Architectural Nexus, Inc. 2019

LICENSED PROFESSIONAL ENGINEER
No. 8182456
TYLER M. SQUIRE
STATE OF UTAH
4/13/2021

UNIVERSITY OF UTAH
WILLIAMS BLDG TIER 3 NETWORK NODE INTERFACE REMODEL
UNIVERSITY OF UTAH RESEARCH PARK, CHIPETA WAY
SALT LAKE CITY, UT

#	Date	Revision

PERMIT SET

NEXUS PROJECT #: 20101
CHECKED BY: TDS
DRAWN BY: DBS
DATE: 02.23.2020

AGENCY APPROVAL

ONE-LINE DIAGRAM - EXISTING

EP601

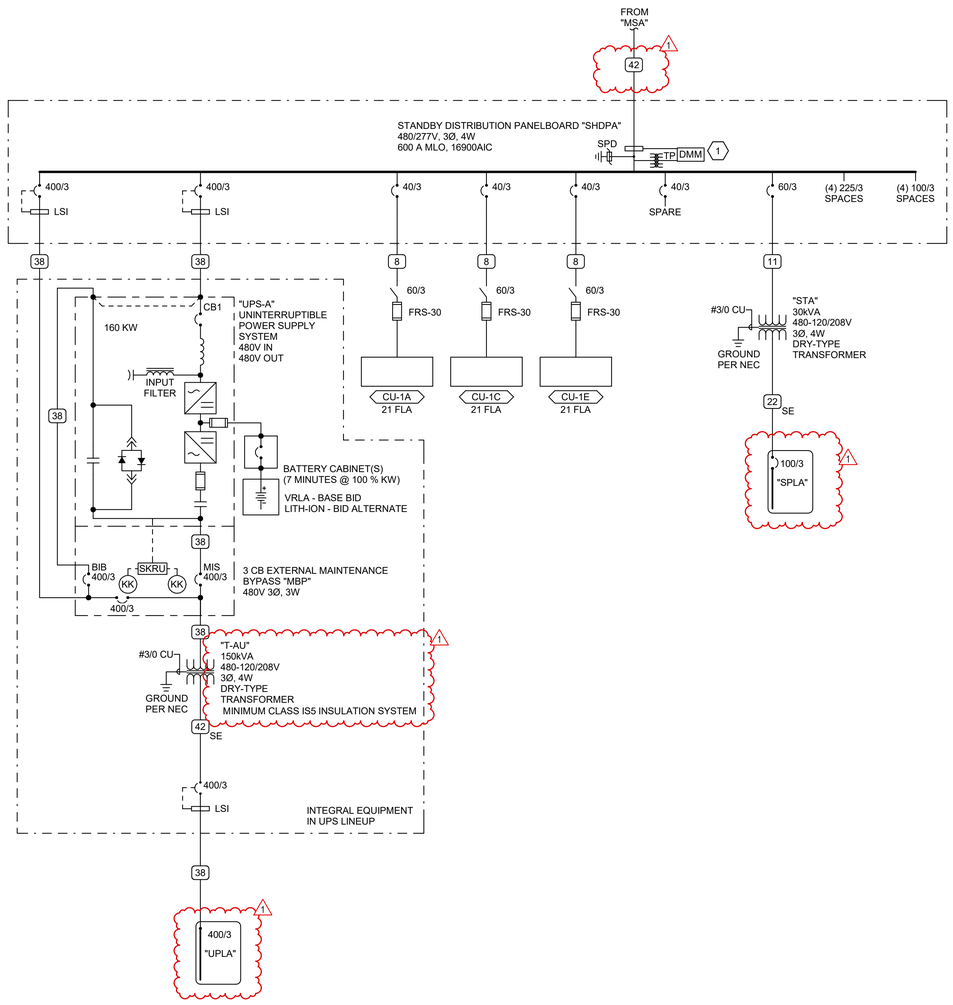

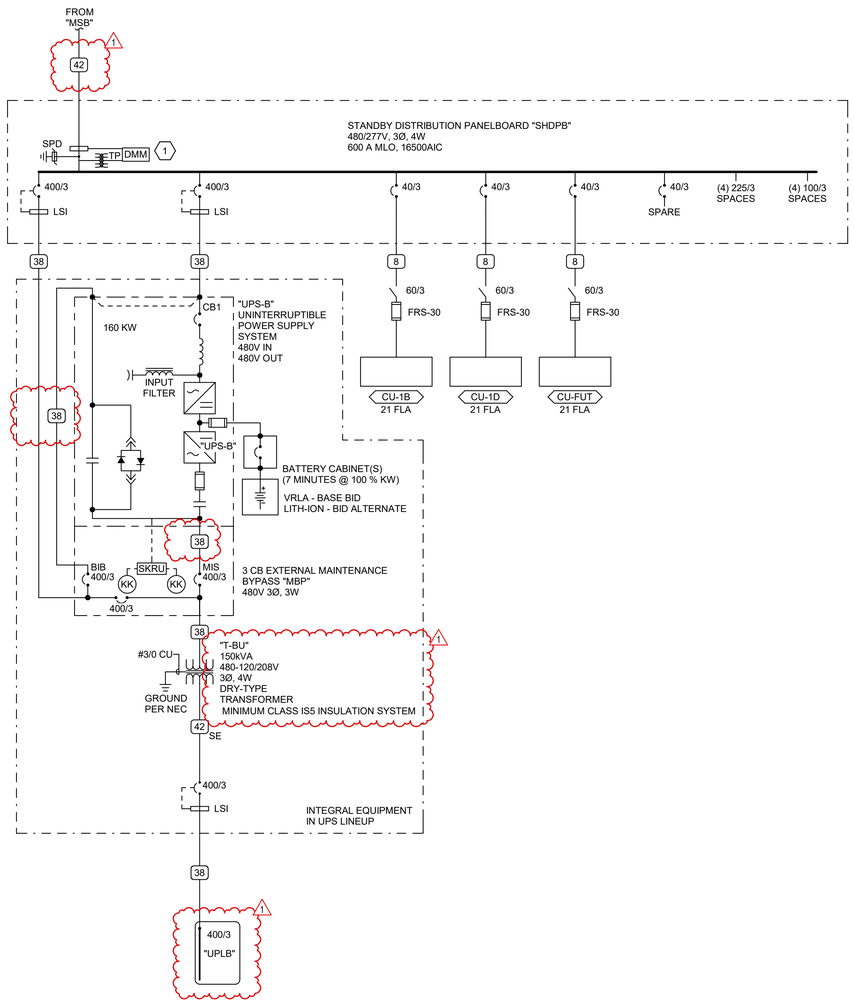

A5 ONE-LINE DIAGRAM - NEW

SCALE: 1/8" = 1'-0"

5/20/2021 3:45:06 PM

SHEET KEYNOTES

1 PROVIDE VERIS DIGITAL MULTI-METER. PROVIDE DATA CONNECTION TO EACH METER.

ARCH | NEXUS

Architectural NEXUS, Inc.
2505 East Parleys Way
Salt Lake City, UT 84109
T 801.924.5000
http://www.archnexus.com

Original drawings remain the property of the Architect and as such the Architect retains total ownership and control. The design represented by these drawings is sold to the client for a one time use, unless otherwise agreed upon in writing by the Architect. © Architectural Nexus, Inc. 2019

LICENSED PROFESSIONAL ENGINEER
No. 8182456
TYLER D. SQUIRE
STATE OF UTAH
4/13/2021

UNIVERSITY OF UTAH

WILLIAMS BLDG TIER 3 NETWORK NODE INTERFACE REMODEL

UNIVERSITY OF UTAH RESEARCH PARK, CHIPETA WAY SALT LAKE CITY, UT

#	Date	Revision
1	5/21/21	Permit Review Comments

PERMIT SET

NEXUS PROJECT #: 20101
CHECKED BY: TDS
DRAWN BY: DBS
DATE: 02.23.2020

AGENCY APPROVAL

ONE-LINE DIAGRAM - NEW

EP602

EQUIPMENT SCHEDULE

EQUIPMENT SCHEDULE KEY
E - DIVISION 26
Q - FURNISHED WITH EQUIPMENT
* - COORDINATE WITH THE DIVISION 23 TEMPERATURE CONTROL INSTALLER
** - AUTOMATIC CONTROL WIRING BY DIVISION 23

NOTES:
1. NEMA 3R
2. TOGGLE SWITCH W/ THERMAL OVERLOAD.
3. PROVIDE CONDUIT AND WIRING ROUGH-IN FOR FUTURE UNITS.
4. CONTRACTOR TO PERFORM FINAL CONNECTION TO LINE VOLTAGE THERMOSTATS.
5. TOGGLE SWITCH W/BACNET INTERFACE.
6. INDOOR UNITS FED FROM OUTDOOR UNIT. PROVIDE DISCONNECTS FOR BOTH.
7. PROVIDE SWITCH WITH BACNET MS/TP CAPABILITY.
8. PROVIDE LABEL ON DISCONNECT "DISCONNECT OUTDOOR UNIT PRIOR TO INDOOR."
9. LINE VOLTAGE THERMOSTAT ON WALL.
10. PROVIDE EXPLOSION PROOF DEVICES AND WIRING METHODS.
11. PROVIDE DUAL-REDUNDANT 100% RATED VFD'S FOR AIR HANDLER.
12. PROVIDE MANUAL STARTER WITH THERMAL OVERLOAD AND RELAY FOR ATC/BAS CONTROL.

GENERAL NOTES:
1. WHERE DISCONNECTS, STARTERS, OR VFCs ARE BEING PROVIDED BY ELECTRICAL CONTRACTOR, LOCATE EQUIPMENT IN ACCESSIBLE LOCATION, SUCH THAT IT IS WITHIN SITE OF THE MECHANICAL EQUIPMENT IT IS SERVING, AND COMPLIES WITH N.E.C. REQUIRED CLEARANCES.

			LOAD DATA								OVERCURRENT PROTECTION			DISCONNECT			STARTER										
MARK	QTY	ITEM DESCRIPTION	HP	kW	MCA	FLA	VOLT	PH	Hz	WIRE AND CONDUIT SIZE	FURN BY	DEVICE	LOCATION	FURN BY	DEVICE	LOCATION	FURN BY	DEVICE	SIZES	SELECTOR SWITCH	PILOT LAMP	NORMALLY OPEN CONTACT	NORMALLY CLOSED CONTACT	PHASE FAILURE RELAY	NOTES	MARK
AC-1A	1	AIR-COOLED CONDENSING UNIT	-	-	-	27	208	1	60	2 #8, #10 GR 1" CND	E	40/2 CB	SPLA	E	60A/2P FRS-40	ADJ TO EQUIP	Q	-	-	-	-	-	-	-		AC-1A
AC-1B	1	AIR-COOLED CONDENSING UNIT	-	-	-	27	208	1	60	2 #8, #10 GR 1" CND	E	40/2 CB	SPLA	E	60A/2P FRS-40	ADJ TO EQUIP	Q	-	-	-	-	-	-	-		AC-1B
AC-1C	1	AIR-COOLED CONDENSING UNIT	-	-	-	27	208	1	60	2 #8, #10 GR 1" CND	E	40/2 CB	SPLA	E	60A/2P FRS-40	ADJ TO EQUIP	Q	-	-	-	-	-	-	-		AC-1C
CU-1A	1	AIR-COOLED CONDENSING UNIT	-	-	-	21	480	1	60	2 #8, #10 GR 1" CND	E	40/3 CB	SHDPB	E	60A/3P FRS-30	ADJ TO EQUIP	Q	-	-	-	-	-	-	-	3	CU-1A
CU-1B	1	AIR-COOLED CONDENSING UNIT	-	-	-	21	480	1	60	2 #8, #10 GR 1" CND	E	40/3 CB	SHDPA	E	60A/3P FRS-30	ADJ TO EQUIP	Q	-	-	-	-	-	-	-		CU-1B
CU-1C	1	AIR-COOLED CONDENSING UNIT	-	-	-	21	480	1	60	2 #8, #10 GR 1" CND	E	40/3 CB	SHDPA	E	60A/3P FRS-30	ADJ TO EQUIP	Q	-	-	-	-	-	-	-		CU-1C
CU-1D	1	AIR-COOLED CONDENSING UNIT	-	-	-	21	480	1	60	2 #8, #10 GR 1" CND	E	40/3 CB	SHDPB	E	60A/3P FRS-30	ADJ TO EQUIP	Q	-	-	-	-	-	-	-		CU-1D
CU-1E	1	AIR-COOLED CONDENSING UNIT	-	-	-	21	480	1	60	2 #8, #10 GR 1" CND	E	40/3 CB	SHDPB	E	60A/3P FRS-30	ADJ TO EQUIP	Q	-	-	-	-	-	-	-		CU-1E
CU-FUT	1	AIR-COOLED CONDENSING UNIT	-	-	-	21	480	1	60	2 #8, #10 GR 1" CND	E	40/3 CB	SHDPA	E	60A/3P FRS-30	ADJ TO EQUIP	Q	-	-	-	-	-	-	-		CU-FUT
FCU-1A	1	FAN COIL UNIT	-	-	6.4	5	208	1	60	2 #10, #10 GR 0.75" CND	E	20/2 CB	SPLA	E	SAME AS OCPD		Q	-	-	-	-	-	-	-		FCU-1A
FCU-1B	1	FAN COIL UNIT	-	-	6.4	5	208	1	60	2 #10, #10 GR 0.75" CND	E	20/2 CB	SPLA	E	SAME AS OCPD		Q	-	-	-	-	-	-	-		FCU-1B
FCU-1C	1	FAN COIL UNIT	-	-	6.4	5	208	1	60	2 #10, #10 GR 0.75" CND	E	20/2 CB	SPLA	E	SAME AS OCPD		Q	-	-	-	-	-	-	-		FCU-1C
HUM-1A	1	HUMIDIFIER	-	3.9	-	18.8	208	1	60	2 #10, #10 GR 0.75" CND	E	30/2 CB	SPLA	E	30A/2P NF	ADJ TO EQUIP	Q	-	-	-	-	-	-	-		HUM-1A
HUM-1B	1	HUMIDIFIER	-	3.9	-	18.8	208	1	60	2 #10, #10 GR 0.75" CND	E	30/2 CB	SPLA	E	30A/2P NF	ADJ TO EQUIP	Q	-	-	-	-	-	-	-		HUM-1B
IRC-1A.1	1	IN-ROW COOLER	-	-	9.3	8	208	1	60	2 #10, #10 GR 0.75" CND	E	20/2 CB	UPLA	E	SAME AS OCPD		Q	-	-	-	-	-	-	-		IRC-1A.1
IRC-1A.2	1	IN-ROW COOLER	-	-	9.3	8	208	1	60	2 #10, #10 GR 0.75" CND	E	20/2 CB	UPLB	E	SAME AS OCPD		Q	-	-	-	-	-	-	-		IRC-1A.2
IRC-1B.1	1	IN-ROW COOLER	-	-	9.3	8	208	1	60	2 #10, #10 GR 0.75" CND	E	20/2 CB	UPLA	E	SAME AS OCPD		Q	-	-	-	-	-	-	-		IRC-1B.1
IRC-1B.2	1	IN-ROW COOLER	-	-	9.3	8	208	1	60	2 #10, #10 GR 0.75" CND	E	20/2 CB	UPLB	E	SAME AS OCPD		Q	-	-	-	-	-	-	-		IRC-1B.2
IRC-1C.1	1	IN-ROW COOLER	-	-	9.3	8	208	1	60	2 #10, #10 GR 0.75" CND	E	20/2 CB	UPLA	E	SAME AS OCPD		Q	-	-	-	-	-	-	-		IRC-1C.1
IRC-1C.2	1	IN-ROW COOLER	-	-	9.3	8	208	1	60	2 #10, #10 GR 0.75" CND	E	20/2 CB	UPLB	E	SAME AS OCPD		Q	-	-	-	-	-	-	-		IRC-1C.2
IRC-1D.1	1	IN-ROW COOLER	-	-	9.3	8	208	1	60	2 #10, #10 GR 0.75" CND	E	20/2 CB	UPLA	E	SAME AS OCPD		Q	-	-	-	-	-	-	-		IRC-1D.1
IRC-1D.2	1	IN-ROW COOLER	-	-	9.3	8	208	1	60	2 #10, #10 GR 0.75" CND	E	20/2 CB	UPLB	E	SAME AS OCPD		Q	-	-	-	-	-	-	-		IRC-1D.2
IRC-1E.1	1	IN-ROW COOLER	-	-	9.3	8	208	1	60	2 #10, #10 GR 0.75" CND	E	20/2 CB	UPLA	E	SAME AS OCPD		Q	-	-	-	-	-	-	-		IRC-1E.1
IRC-1E.2	1	IN-ROW COOLER	-	-	9.3	8	208	1	60	2 #10, #10 GR 0.75" CND	E	20/2 CB	UPLB	E	SAME AS OCPD		Q	-	-	-	-	-	-	-		IRC-1E.2
IRC-FUT.1	1	IN-ROW COOLER	-	-	9.3	8	208	1	60	2 #10, #10 GR 0.75" CND	E	20/2 CB	UPLA	E	SAME AS OCPD		Q	-	-	-	-	-	-	-	3	IRC-FUT.1
IRC-FUT.2	1	IN-ROW COOLER	-	-	9.3	8	208	1	60	2 #10, #10 GR 0.75" CND	E	20/2 CB	UPLB	E	SAME AS OCPD		Q	-	-	-	-	-	-	-	3	IRC-FUT.2

ARCH | NEXUS
Architectural NEXUS, Inc.
2505 East Parleys Way
Salt Lake City, UT 84109
T 801.924.5000
http://www.archnexus.com

Original drawings remain the property of the Architect and as such the Architect retains total ownership and control. The design represented by these drawings is sold to the client for a one time use, unless otherwise agreed upon in writing by the Architect.
© Architectural Nexus, Inc. 2019

LICENSED PROFESSIONAL ENGINEER
No. 8182456
TYLER M. SQUIRE
STATE OF UTAH
4/13/2021

UNIVERSITY OF UTAH
WILLIAMS BLDG TIER 3 NETWORK NODE INTERFACE REMODEL
UNIVERSITY OF UTAH RESEARCH PARK, CHIPETA WAY
SALT LAKE CITY, UT

#	Date	Revision

PERMIT SET

NEXUS PROJECT #: 20101
CHECKED BY: TDS
DRAWN BY: DBS
DATE: 02.23.2020

AGENCY APPROVAL

EQUIPMENT SCHEDULE

EP603

5/20/2021 3:45:09 PM

PANEL: "SPLA"

VOLTS/PHASE/WIRE:	PANEL SIZE & TYPE:	MAIN SIZE AND TYPE:	FED FROM:	CABINET:	LOCATION:	NOTES:
120/208V, 3 PH 4 WIRE	22" W x 6" D, BOLT-ON	100 AMPERE MAIN LUGS		SURFACE	UPS 101	

ACCESSORIES: PANEL DIRECTORY, IDENTIFICATION, GROUNDING BAR — **AIC RATING:** 10000

CKT	OCP			LOAD (kVA)				PHASE LOAD							LOAD (kVA)			OCP			CKT
NO	AMP	POLE	BR...	LTG	PWR	CO	DESCRIPTION	A		B		C		DESCRIPTION	CO	PWR	LTG	BR...	POLE	AMP	NO
1	20	1		0.0	0.0	0.5	CO: ELEC ROOM/RAMP	0.5	0.2					PWR: FIRE SPRINKLER PANEL	0.0	0.2	0.0		1	20	2
3	20	1		0.0	0.0	0.5	CO: SERVER ROOM 102			0.5	0.2			PWR: FIRE SPRINKLER...	0.0	0.2	0.0		1	20	4
5	20	1		0.0	0.0	0.7	CO: SERVER ROOM 102					0.7	0.9	CO: ROOF RCPTS	0.9	0.0	0.0		1	20	6
7	20	1		0.0	0.0	0.7	CO: SERVER ROOM 102	0.7	0.2					PWR: VESDA SYSTEM	0.0	0.2	0.0		1	20	8
9	20	1		0.0	0.5	0.0	PWR: UPS 101 CONDENSATE...			0.5	0.0			PWR: PRE-ACTION CABINET	0.0	0.0	0.0		1	20	10
11	20	1	--	--	--	--	SPARE					0.0	0.5	PWR: PRE-ACTION CABINET	0.0	0.5	0.0		1	20	12
13	20	1	--	--	--	--	SPARE	0.0	0.0					PWR: AIR SAMPLING PANEL	0.0	0.0	0.0		1	20	14
15	20	1	--	--	--	--	SPARE			0.0	0.0			SPARE	--	--	--	--	1	20	16
17	20	1	--	--	--	--	SPARE					0.0	0.0	SPARE	--	--	--	--	1	20	18
19	20	1	--	--	--	--	SPARE	0.0	0.0					SPARE	--	--	--	--	1	20	20
21	20	1	--	--	--	--	SPARE			0.0	0.0			SPARE	--	--	--	--	1	20	22
23	30	2		0.0	3.9	0.0	PWR: HUM-1A					2.0	0.0	SPARE	--	--	--	--	1	20	24
25	--	--	--	--	--	--	--	2.0	0.0					SPARE	--	--	--	--	1	20	26
27	30	2		0.0	3.9	0.0	PWR: HUM-1B			2.0	0.0			SPARE	--	--	--	--	1	20	28
29	--	--	--	--	--	--	--					2.0	0.0	SPARE	--	--	--	--	1	20	30
31	20	2		0.0	1.0	0.0	PWR: FCU-1A	0.5	2.8					PWR: AC-1A	0.0	5.6	0.0		2	40	32
33	--	--	--	--	--	--	--			0.5	2.8			--	--	--	--	--	--	--	34
35	20	2		0.0	1.0	0.0	PWR: FCU-1B					0.5	2.8	PWR: AC-1B	0.0	5.6	0.0		2	40	36
37	--	--	--	--	--	--	--	0.5	2.8					--	--	--	--	--	--	--	38
39	20	2		0.0	1.0	0.0	PWR: FCU-1C			0.5	2.8			PWR: AC-1C	0.0	5.6	0.0		2	40	40
41	--	--	--	--	--	--	--					0.5	2.8	--	--	--	--	--	--	--	42
TOTALS:							CONNECTED kVA PER PHASE	**10**		**10**		**13**		CONNECTED TOTAL kVA =					**32**		
							CONNECTED AMPS PER PHASE	**86**		**82**		**106**		AVERAGE CONNECTED AMPS PER PHASE =					**89**		

NEC DIVERSIFIED LOAD CALCULATIONS

LIGHTING & CONTINUOUS LOADS:
RECEPTACLES: **3.4 kVA @ 100% = 3.4 kVA**
ALL OTHER LOADS @ 100% : **30.2 kVA**

- 100% CONNECTED LOAD PLUS 25%
- FIRST 10kVA @ 100%, REMAINDER @ 50%
- MOTOR TOTALS INCLUDED IN ALL OTHER LOADS WITH LARGEST MOTOR CALCULATED @ 125% PER NEC

DIVERSIFIED TOTAL kVA = **34**
AVERAGE AMPS PER PHASE = **93**

BKR: GF=GFCI, GF3=30mA GFCI CAPABLE OF BEING LOCKED OUT IN OPEN POSITION, IG=ISOLATED GROUND, AF=AFCI, ST=SHUNT TRIP, RED=PROVIDE RED COLORED BREAKER, AF=ARC FAULT CURRENT INTERRUPTER, GA=COMBINATION OF GROUND FAULT AND ARC FAULT CIRCUIT INTERRUPTER, GS=COMBINATION OF SHUNT TRIP WITH GFCI

PANEL: "UPLB"

VOLTS/PHASE/WIRE:	PANEL SIZE & TYPE:	MAIN SIZE AND TYPE:	FED FROM:	CABINET:	LOCATION:	NOTES:
120/208V, 3 PH 4 WIRE	22" W x 6" D, BOLT-ON	400 AMPERE MAIN LUGS		SURFACE	SERVER ROOM 102	

ACCESSORIES: PANEL DIRECTORY, IDENTIFICATION, GROUNDING BAR — **AIC RATING:** 23868

CKT	OCP			LOAD (kVA)				PHASE LOAD							LOAD (kVA)			OCP			CKT
NO	AMP	POLE	BR...	LTG	PWR	CO	DESCRIPTION	A		B		C		DESCRIPTION	CO	PWR	LTG	BR...	POLE	AMP	NO
1	60	2		0.0	7.5	0.0	PWR: RACK A-10	3.8	3.8					PWR: RACK A-7	0.0	7.5	0.0		2	60	2
3	--	--	--	--	--	--	--			3.8	3.8			--	--	--	--	--	--	--	4
5	30	2		0.0	5.0	0.0	PWR: RACK A-6					2.5	2.5	PWR: RACK A-5	0.0	5.0	0.0		2	30	6
7	--	--	--	--	--	--	--	2.5	2.5					--	--	--	--	--	--	--	8
9	30	2		0.0	5.0	0.0	PWR: RACK A-9			2.5	2.5			PWR: RACK B-8	0.0	5.0	0.0		2	30	10
11	--	--	--	--	--	--	--					2.5	2.5	--	--	--	--	--	--	--	12
13	30	2		0.0	5.0	0.0	PWR: RACK A-8	2.5	2.5					PWR: RACK B-9	0.0	5.0	0.0		2	30	14
15	--	--	--	--	--	--	--			2.5	2.5			--	--	--	--	--	--	--	16
17	60	2		0.0	7.5	0.0	PWR: RACK A-4					3.8	3.8	PWR: RACK B-10	0.0	7.5	0.0		2	60	18
19	--	--	--	--	--	--	--	3.8	3.8					--	--	--	--	--	--	--	20
21	30	2		0.0	5.0	0.0	PWR: RACK A-3			2.5	3.8			PWR: RACK B-4	0.0	7.5	0.0		2	60	22
23	--	--	--	--	--	--	--					2.5	3.8	--	--	--	--	--	--	--	24
25	30	2		0.0	5.0	0.0	PWR: RACK A-2	2.5	0.0					SPARE	--	--	--	--	1	20	26
27	--	--	--	--	--	--	--			2.5	0.0			SPARE	--	--	--	--	1	20	28
29	60	2		0.0	7.5	0.0	PWR: RACK A-1					3.8	0.0	SPARE	--	--	--	--	1	20	30
31	--	--	--	--	--	--	--	3.8	0.0					SPARE	--	--	--	--	1	20	32
33	60	2		0.0	7.5	0.0	PWR: RACK B-1			3.8	0.0			SPARE	--	--	--	--	1	20	34
35	--	--	--	--	--	--	--					3.8	0.0	SPARE	--	--	--	--	1	20	36
37	30	2		0.0	5.0	0.0	PWR: RACK B-2	2.5	0.0					SPARE	--	--	--	--	1	20	38
39	--	--	--	--	--	--	--			2.5	0.0			SPARE	--	--	--	--	1	20	40
41	30	2		0.0	5.0	0.0	PWR: RACK B-3					2.5	0.0	SPARE	--	--	--	--	1	20	42
43	--	--	--	--	--	--	--	2.5	0.0					SPARE	--	--	--	--	1	20	44
45	20	1	--	--	--	--	SPARE			0.0	0.0			SPARE	--	--	--	--	1	20	46
47	30	2		0.0	5.0	0.0	PWR: RACK B-5					2.5	0.0	SPARE	--	--	--	--	1	20	48
49	--	--	--	--	--	--	--	2.5	0.8					PWR: IRC-1A.2	0.0	1.7	0.0		2	20	50
51	30	2		0.0	5.0	0.0	PWR: RACK B-6			2.5	0.8			--	--	--	--	--	--	--	52
53	--	--	--	--	--	--	--					2.5	0.8	PWR: IRC-1B.2	0.0	1.7	0.0		2	20	54
55	60	2		0.0	7.5	0.0	PWR: RACK B-7	3.8	0.8					--	--	--	--	--	--	--	56
57	--	--	--	--	--	--	--			3.8	0.8			PWR: IRC-1C.2	0.0	1.7	0.0		2	20	58
59	20	1	--	--	--	--	SPARE					0.0	0.8	--	--	--	--	--	--	--	60
61	20	1	--	--	--	--	SPARE	0.0	0.8					PWR: IRC-1D.2	0.0	1.7	0.0		2	20	62
63	20	1	--	--	--	--	SPARE			0.0	0.8			--	--	--	--	--	--	--	64
65	20	1	--	--	--	--	SPARE					0.0	0.8	PWR: IRC-1E.2	0.0	1.7	0.0		2	20	66
67	20	1	--	--	--	--	SPARE	0.0	0.8					--	--	--	--	--	--	--	68
69	20	1	--	--	--	--	SPARE			0.0	0.8			PWR: IRC-FUT.2	0.0	1.7	0.0		2	20	70
71	20	1	--	--	--	--	SPARE					0.0	0.8	--	--	--	--	--	--	--	72
TOTALS:							CONNECTED kVA PER PHASE	**46**		**42**		**42**		CONNECTED TOTAL kVA =					**130**		
							CONNECTED AMPS PER PHASE	**382**		**351**		**351**		AVERAGE CONNECTED AMPS PER PHASE =					**361**		

NEC DIVERSIFIED LOAD CALCULATIONS

LIGHTING & CONTINUOUS LOADS:
RECEPTACLES:
ALL OTHER LOADS @ 100% : **130.4 kVA**

- 100% CONNECTED LOAD PLUS 25%
- FIRST 10kVA @ 100%, REMAINDER @ 50%
- MOTOR TOTALS INCLUDED IN ALL OTHER LOADS WITH LARGEST MOTOR CALCULATED @ 125% PER NEC

DIVERSIFIED TOTAL kVA = **130**
AVERAGE AMPS PER PHASE = **362**

BKR: GF=GFCI, GF3=30mA GFCI CAPABLE OF BEING LOCKED OUT IN OPEN POSITION, IG=ISOLATED GROUND, AF=AFCI, ST=SHUNT TRIP, RED=PROVIDE RED COLORED BREAKER, AF=ARC FAULT CURRENT INTERRUPTER, GA=COMBINATION OF GROUND FAULT AND ARC FAULT CIRCUIT INTERRUPTER, GS=COMBINATION OF SHUNT TRIP WITH GFCI

PANEL: "UPLA"

VOLTS/PHASE/WIRE:	PANEL SIZE & TYPE:	MAIN SIZE AND TYPE:	FED FROM:	CABINET:	LOCATION:	NOTES:
120/208V, 3 PH 4 WIRE	22" W x 6" D, BOLT-ON	400 AMPERE MAIN LUGS		SURFACE	SERVER ROOM 102	

ACCESSORIES: PANEL DIRECTORY, IDENTIFICATION, GROUNDING BAR — **AIC RATING:** 23868

CKT	OCP			LOAD (kVA)				PHASE LOAD							LOAD (kVA)			OCP			CKT
NO	AMP	POLE	BR...	LTG	PWR	CO	DESCRIPTION	A		B		C		DESCRIPTION	CO	PWR	LTG	BR...	POLE	AMP	NO
1	60	2		0.0	7.5	0.0	PWR: RACK A-10	3.8	3.8					PWR: RACK A-7	0.0	7.5	0.0		2	60	2
3	--	--	--	--	--	--	--			3.8	3.8			--	--	--	--	--	--	--	4
5	30	2		0.0	5.0	0.0	PWR: RACK A-6					2.5	2.5	PWR: RACK A-5	0.0	5.0	0.0		2	30	6
7	--	--	--	--	--	--	--	2.5	2.5					--	--	--	--	--	--	--	8
9	30	2		0.0	5.0	0.0	PWR: RACK A-9			2.5	2.5			PWR: RACK B-8	0.0	5.0	0.0		2	30	10
11	--	--	--	--	--	--	--					2.5	2.5	--	--	--	--	--	--	--	12
13	30	2		0.0	5.0	0.0	PWR: RACK A-8	2.5	2.5					PWR: RACK B-9	0.0	5.0	0.0		2	30	14
15	--	--	--	--	--	--	--			2.5	2.5			--	--	--	--	--	--	--	16
17	60	2		0.0	7.5	0.0	PWR: RACK A-4					3.8	3.8	PWR: RACK B-10	0.0	7.5	0.0		2	60	18
19	--	--	--	--	--	--	--	3.8	3.8					--	--	--	--	--	--	--	20
21	30	2		0.0	5.0	0.0	PWR: RACK A-3			2.5	3.8			PWR: RACK B-4	0.0	7.5	0.0		2	60	22
23	--	--	--	--	--	--	--					2.5	3.8	--	--	--	--	--	--	--	24
25	30	2		0.0	5.0	0.0	PWR: RACK A-2	2.5	0.0					SPARE	--	--	--	--	1	20	26
27	--	--	--	--	--	--	--			2.5	0.0			SPARE	--	--	--	--	1	20	28
29	60	2		0.0	7.5	0.0	PWR: RACK A-1					3.8	0.0	SPARE	--	--	--	--	1	20	30
31	--	--	--	--	--	--	--	3.8	0.0					SPARE	--	--	--	--	1	20	32
33	60	2		0.0	7.5	0.0	PWR: RACK B-1			3.8	0.0			SPARE	--	--	--	--	1	20	34
35	--	--	--	--	--	--	--					3.8	0.0	SPARE	--	--	--	--	1	20	36
37	30	2		0.0	5.0	0.0	PWR: RACK B-2	2.5	0.0					SPARE	--	--	--	--	1	20	38
39	--	--	--	--	--	--	--			2.5	0.0			SPARE	--	--	--	--	1	20	40
41	30	2		0.0	5.0	0.0	PWR: RACK B-3					2.5	0.0	SPARE	--	--	--	--	1	20	42
43	--	--	--	--	--	--	--	2.5	0.0					SPARE	--	--	--	--	1	20	44
45	20	1	--	--	--	--	SPARE			0.0	0.0			SPARE	--	--	--	--	1	20	46
47	30	2		0.0	5.0	0.0	PWR: RACK B-5					2.5	0.0	SPARE	--	--	--	--	1	20	48
49	--	--	--	--	--	--	--	2.5	0.8					PWR: IRC-1A.1	0.0	1.7	0.0		2	20	50
51	30	2		0.0	5.0	0.0	PWR: RACK B-6			2.5	0.8			--	--	--	--	--	--	--	52
53	--	--	--	--	--	--	--					2.5	0.8	PWR: IRC-1B.1	0.0	1.7	0.0		2	20	54
55	60	2		0.0	7.5	0.0	PWR: RACK B-7	3.8	0.8					--	--	--	--	--	--	--	56
57	--	--	--	--	--	--	--			3.8	0.8			PWR: IRC-1C.1	0.0	1.7	0.0		2	20	58
59	20	1	--	--	--	--	SPARE					0.0	0.8	--	--	--	--	--	--	--	60
61	20	1	--	--	--	--	SPARE	0.0	0.8					PWR: IRC-1D.1	0.0	1.7	0.0		2	20	62
63	20	1	--	--	--	--	SPARE			0.0	0.8			--	--	--	--	--	--	--	64
65	20	1	--	--	--	--	SPARE					0.0	0.8	PWR: IRC-1E.1	0.0	1.7	0.0		2	20	66
67	20	1	--	--	--	--	SPARE	0.0	0.8					--	--	--	--	--	--	--	68
69	20	1	--	--	--	--	SPARE			0.0	0.8			PWR: IRC-FUT.1	0.0	1.7	0.0		2	20	70
71	20	1	--	--	--	--	SPARE					0.0	0.8	--	--	--	--	--	--	--	72
TOTALS:							CONNECTED kVA PER PHASE	**46**		**42**		**42**		CONNECTED TOTAL kVA =					**130**		
							CONNECTED AMPS PER PHASE	**382**		**351**		**351**		AVERAGE CONNECTED AMPS PER PHASE =					**361**		

NEC DIVERSIFIED LOAD CALCULATIONS

LIGHTING & CONTINUOUS LOADS:
RECEPTACLES:
ALL OTHER LOADS @ 100% : **130.4 kVA**

- 100% CONNECTED LOAD PLUS 25%
- FIRST 10kVA @ 100%, REMAINDER @ 50%
- MOTOR TOTALS INCLUDED IN ALL OTHER LOADS WITH LARGEST MOTOR CALCULATED @ 125% PER NEC

DIVERSIFIED TOTAL kVA = **130**
AVERAGE AMPS PER PHASE = **362**

BKR: GF=GFCI, GF3=30mA GFCI CAPABLE OF BEING LOCKED OUT IN OPEN POSITION, IG=ISOLATED GROUND, AF=AFCI, ST=SHUNT TRIP, RED=PROVIDE RED COLORED BREAKER, AF=ARC FAULT CURRENT INTERRUPTER, GA=COMBINATION OF GROUND FAULT AND ARC FAULT CIRCUIT INTERRUPTER, GS=COMBINATION OF SHUNT TRIP WITH GFCI

ARCH | NEXUS

Architectural NEXUS, Inc.
2505 East Parleys Way
Salt Lake City, UT 84109
T 801.924.5000
http://www.archnexus.com

Original drawings remain the property of the Architect and as such the Architect retains total ownership and control. The design represented by these drawings is sold to the client for a one time use, unless otherwise agreed upon in writing by the Architect. © Architectural Nexus, Inc. 2019

LICENSED PROFESSIONAL ENGINEER
No. 8182456
TYLER K. QUIRE
STATE OF UTAH
4/13/2021

UNIVERSITY OF UTAH
WILLIAMS BLDG TIER 3 NETWORK NODE INTERFACE REMODEL
UNIVERSITY OF UTAH RESEARCH PARK, CHIPETA WAY
SALT LAKE CITY, UT

#	Date	Revision

AGENCY APPROVAL

PERMIT SET

NEXUS PROJECT #: 20101
CHECKED BY: TDS
DRAWN BY: DBS
DATE: 02.23.2020

PANEL SCHEDULES

EP604

5/20/2021 3:45:12 PM

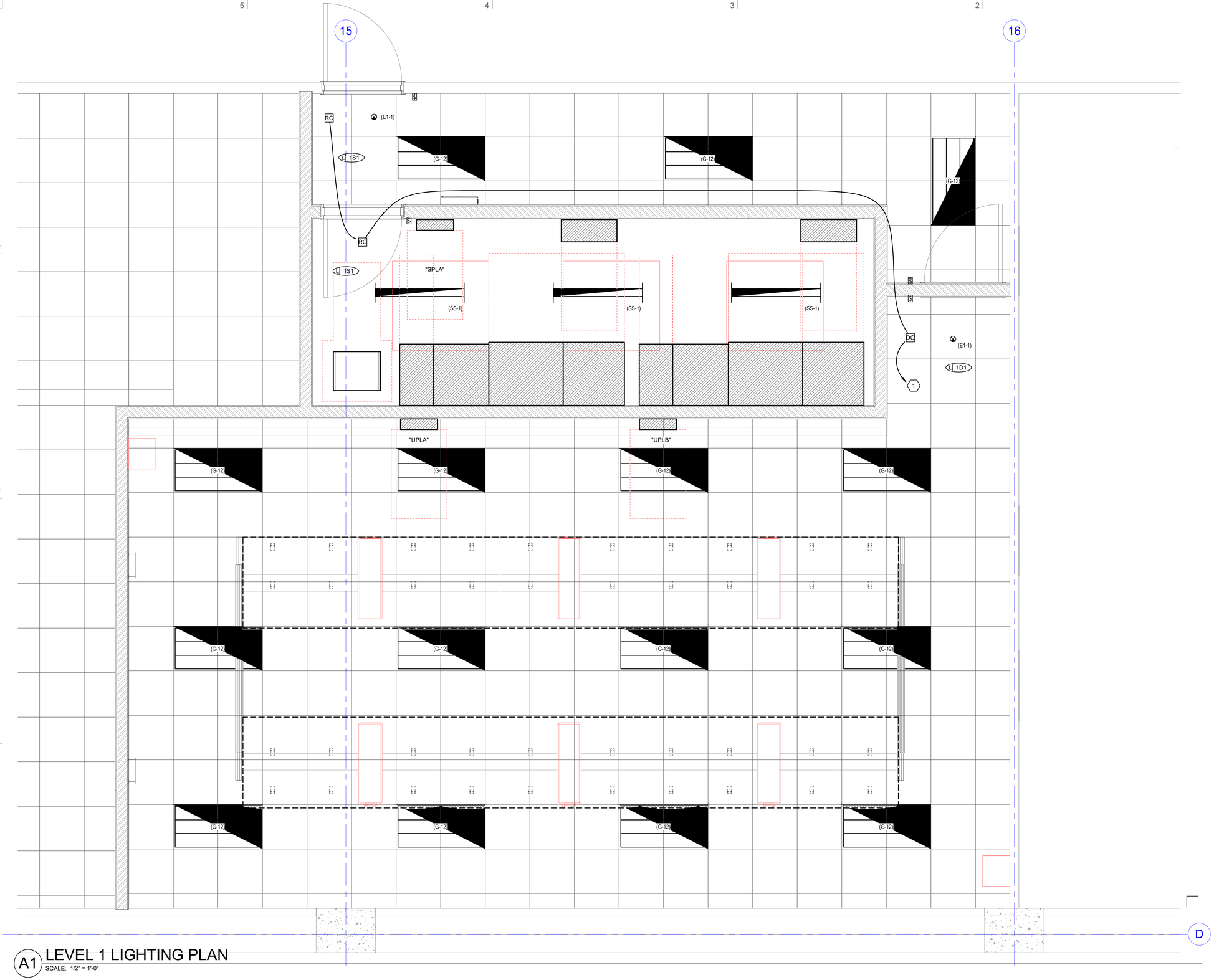

A1 LEVEL 1 LIGHTING PLAN
SCALE: 1/2" = 1'-0"

5/20/2021 3:44:24 PM

GENERAL SHEET NOTES

1 CONNECT EXIT SIGNS TO UNSWITCHED LEG OF ASSOCIATED CIRCUIT.

2 PROVIDE EM BATTERY PACKS FOR ALL EXIT SIGNS.

SHEET KEYNOTES

1 CONNECT TO EXISTING EMERGENCY LIGHTING CIRCUIT PREVIOUSLY FEEDING LIGHTING IN THIS AREA.

AGENCY APPROVAL

ARCH | NEXUS

Architectural NEXUS, Inc.
2505 East Parleys Way
Salt Lake City, UT 84109
T 801.924.5000
http://www.archnexus.com

Original drawings remain the property of the Architect and as such the Architect retains total ownership and control. The design represented by these drawings is sold to the client for a one time use, unless otherwise agreed upon in writing by the Architect.
© Architectural Nexus, Inc. 2019

LICENSED PROFESSIONAL ENGINEER
No. 8182456
TYLER SQUIRE
STATE OF UTAH
4/13/2021

UNIVERSITY OF UTAH

WILLIAMS BLDG TIER 3 NETWORK NODE INTERFACE REMODEL

UNIVERSITY OF UTAH RESEARCH PARK, CHIPETA WAY
SALT LAKE CITY, UT

#	Date	Revision

PERMIT SET

NEXUS PROJECT #: 20101
CHECKED BY: TDS
DRAWN BY: DBS
DATE: 02.23.2020

LEVEL 1 LIGHTING PLAN

EL101

LIGHTING/SPACE CONTROL TYPE SCHEDULE

WIRING LEGEND

- ——— LINE VOLTAGE WIRING
- - - - - 0-10V WIRING
- -·-·- CAT5E CABLING
- ——— WIRING BY OTHERS
- —○—○— TMP SEGMENT NETWORK CABLING

APPROVED MANUFACTURERS

1. WATTSTOPPER (BASIS OF DESIGN)
2. NLIGHT
3. HUBBEL BUILDING AUTOMATION
4. GREENGATE

LIGHTING CONTROL ID

1. # = NUMBER OF ZONES
2. D = DIMMING, S = SWITCHING
3. P = DAYLIGHT PHOTOCELL
4. L = PLUG LOAD CONTROLLER
5. # = INSTANCE

GENERAL NOTES

1. COORDINATE INITIAL PROGRAMMING WITH OWNER AND MODIFY CONTROL TIMES AND OPERATION AS REQUESTED BY OWNER.
2. PROVIDE FINE TUNING PROGRAMMING AND ADJUSTMENTS UPON REQUEST BY OWNER WITHIN FIRST 6 MONTHS AFTER SUBSTANTIAL COMPLETION.
3. PROVIDE CUSTOMIZED ENGRAVED PERMANENT BUTTON LABELS ON EACH SWITCH, LABEL TO MATCH BUTTON LABEL ID OR AS DIRECTED BY OWNER.
4. PART NUMBERS SHOWN ARE BASED ON WATTSTOPPER AS THE BASIS OF DESIGN. ALL APPROVED MANUFACTURERS ARE SUBJECT TO MEETING ALL FUNCTIONS AND CAPABILITIES OF THE BASIS OF DESIGN SYSTEM AND PRODUCTS. FAILURE TO MEET THESE SHALL REQUIRE THE CONTRACTOR TO PROVIDE A SYSTEM THAT DOES AT NOT ADDITIONAL COST.

GENERAL NOTES

5. REFER TO PLANS FOR LOCATIONS AND QUANTITIES OF DEVICES.
6. INSTALL ONE OF EACH CONTROL TYPE WITH PROGRAMMING, ADJUST, AND OBTAIN OWNERS APPROVAL PRIOR TO PROGRAMMING THE REMAINING CONTROLS.
7. WIRING MAY VARY BETWEEN MANUFACTURERS. CONTRACTOR IS RESPONSIBLE FOR PROVIDING THE REQUIRED WIRING THAT WILL BOTH MEET THE MANUFACTURERS REQUIREMENTS AND MATCH WITH THE SHOWN SYSTEM.
8. PROVIDE COMPLETE SHOP DRAWING SUBMITTALS INCLUDING OCCUPANCY SENSOR LAYOUT AND COVERAGE PATTERNS. PROVIDE ADDITIONAL SENSORS AS REQUIRED FOR 100% COVERAGE OF SPACES WITH OCCUPANCY SENSOR CONTROL.

ID	DETAIL	LIGHTS ON CONTROL	LIGHTS OFF CONTROL	LIGHTING CONTROL TYPE	DAYLIGHT SENSOR SETTING (FC)	TIME DELAY TO OFF (MIN.)	BAS AUX RELAY SIGNAL	PLUG LOAD CONTROLLER	NETWORKED CONTROLS	BUTTON_1	BUTTON_2	BUTTON_3	BUTTON_4	BUTTON_5	BUTTON_6	BUTTON_7	BUTTON_8	BUTTON_9	NOTES
1D1	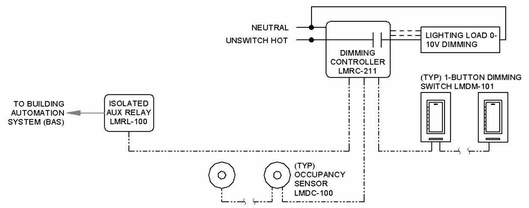	MANUAL & OCCUPANCY	MANUAL OR OCCUPANCY	DIMMING 0-10V	-	15	RELAY CLOSED ON OCCUPANCY	-	-	FUNCTION: PRESS TOP-ON, HOLD TOP-RAISE LABEL ID: TOP-"ON/RAISE" BOTTOM-"OFF/ LOWER"	-	-	-	-	-	-	-	-	-	
1S1	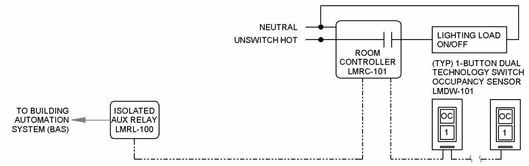	MANUAL & OCCUPANCY	MANUAL OR OCCUPANCY	ON/OFF	-	15	RELAY CLOSED ON OCCUPANCY	-	-	FUNTION: PRESS-ON PRESS-OFF LABEL ID:"ON/OFF"	-	-	-	-	-	-	-	-	

INTERIOR LIGHTING FIXTURE SCHEDULE

ABBREVIATIONS

MOUNTING

- B - BASE
- C - CEILING
- F - FLANGE
- G - GRID
- P - PENDANT
- PL - POLE
- R - RECESSED
- S - SURFACE
- W - WALL

LUMINAIRE OPTIONS

- ARHR - AIR RETURN AND HEAT REJECTION
- DL - DAMP LOCATION
- EQC - EARTHQUAKE CLIPS
- F - FUSING
- HLD - HINGED AND LATCHED DOOR
- HS - HOUSE SIDE SHIELD
- PS - PHOTOCELL SWITCH
- QRS - QUARTZ RESTRIKE
- ST - STATIC
- WG - WIRE GUARD
- WL - WET LOCATION

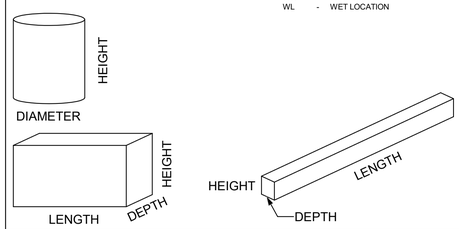

FINISH

- MW - MATTE WHITE
- BL - BLACK
- SL - SILVER
- GL - GOLD
- CL - CLEAR
- PW - PAINTED WHITE
- EA - EXTRUDED ALUMINUM
- S - STEEL
- GS - GALVANIZED STEEL
- C - CAST
- CBA - COLOR BY ARCHITECT
- SCBA - STANDARD COLOR BY ARCHITECT
- CCA - CUSTOM COLOR BY ARCHITECT
- FS 209D - MEETS FEDERAL STANDARD 209D
- TP - THERMALLY PROTECTED
- FL - FLUSH
- R - REGRESS
- M - MITERED

DIFFUSER/LENS

- #A - ACRYLIC #THICK
- #OA - ACRYLIC #THICK (OPAL)
- GC - GLASS (CLEAR)
- GO - GLASS (OPAL)
- GF - GLASS (FROSTED)
- SGL - SOFT GLOW LENS
- HPL - HIGH PERFORMANCE LENS
- DO - DROP OPAL
- CGL - CONVEX GLASS LENS
- S - SATIN LENS

REFLECTOR

- OP - NONE/OPEN
- SP - SPECULAR
- SS - SEMI-SPECULAR
- D - DIFFUSE (WHITE ENAMEL)
- SC - SPECULAR (COLORED)
- PR - PRISMATIC
- FDR - FULL DEPTH REFLECTOR
- DS - DIFFUSE (SEMI SPECULAR) SILVER
- LI - LOW IRIDESCENT
- IR - IRIDESCENT
- SL - SILVER
- GL - GOLD
- CA - CLEAR ALZAK

NOTES

GENERAL NOTES

1. PROVIDE UNIT PRICES AND FIXTURE BRAND SELECTED FOR ADD/DELETE CHANGES FOR EACH FIXTURE TYPES SHOWN WITHIN 48 BUSINESS HOURS OF THE BID DATE. FAILURE TO COMPLY WITH THIS REQUIREMENT MAY DISQUALIFY THE PRODUCTS AND EMPOWER THE ENGINEER TO DETERMINE FAIR VALUE FOR FIXTURE AND INSTALLATION CHANGES, WITHOUT FURTHER INPUT FROM THE CONTRACTOR OR INSTALLER.
2. CONTRACTOR ALLOWANCE PRICES ARE ACCURATE WHEN THIS JOB WAS SPECIFIED, CONTRACTOR AND ELECTRICAL DISTRIBUTOR SHALL VERIFY THIS ALLOWANCE AND REPORT ANY PROBLEMS TO THE ENGINEER BEFORE THE BID. ALLOWANCE PRICE MAY OR MAY NOT INCLUDE LAMP(S) OR FREIGHT AS NOTED, AND DO NOT INCLUDE ANY TAXES.
3. SUBSTITUTIONS AND/OR EQUAL FIXTURES MUST RECEIVE APPROVAL PRIOR TO BIDDING, THEY MUST BE SUBMITTED TO THE ENGINEER NO LESS THAN 2 WEEKS PRIOR TO BID OPENING.
4. SAMPLES MUST BE PROVIDED FOR ANY AND ALL FIXTURES UPON A/E REQUEST PRIOR TO RELEASING FIXTURES.
5. ALL FIXTURES SHALL BE LISTED AND APPROVED FOR THEIR INTENDED USE AND LOCATION.
6. VERIFY THE PROPER MOUNTING KITS OR ACCESSORIES TO FACILITATE INSTALLATION AS SHOWN AT EACH LOCATION ON THE DRAWINGS.
7. COMPLY WITH THE "INTERIOR LIGHTING" SECTION OF THE SPECIFICATIONS.
8. REFER TO SPECIFICATIONS FOR IMPORTANT TECHNICAL REQUIREMENTS FOR LIGHTING FIXTURES, DRIVERS, AND LAMPS.
9. ALL LIGHT FIXTURES TO BE EITHER "DLC" OR "LIGHTING FACTS" LISTED OR TO BE APPROVED BY ARCHITECT/ENGINEER AND OWNER.

ID	DESCRIPTION	NOMINAL SIZE LENGTH	NOMINAL SIZE DEPTH	NOMINAL SIZE HEIGHT	NOMINAL SIZE DIAMETER/ APERTURE	MOUNTING	TYPE	COLOR TEMP	CRI	DRIVER CONFIGURATION	VOLTAGE	WATTS	FINISH	FIXTURE LUMENS	DIFFUSER/LENS	REFLECTOR	OPTIONS	NOTES	MANUFACTURER (CATALOG SERIES) OPTION 1	OPTION 2	OPTION 3
(E1-1)	RECESSED EDGE LIT EXIT SIGN, INTEGRAL EM BATTERY WITH SELF-DIAGNOSTICS (SINGLE FACE)	11 3/4"	8 1/4"	2"	-	W, C, S, P	LED	GREEN	-	LED DRIVER	120/277	2	WH	0	-	-	-		LITHONIA (EDGR-1-G-EL-SD)	SURE-LITES	DUAL LITE
(G-12)	LAY-IN 2'X4' LED FLAT PANEL. 5000 LUMENS.	4'	2'	3"		C,R	LED	4000K		LED DRIVER (0-10V DIMMING)	UNV	45		5000					LITHONIA (EPANL-2X4-4800LMHE-80 CRI-40K-MIN10-ZT-MVOLT)		
(SS-1)	4' LED STRIPLIGHT. ROUND LENS, 5000 LUMENS, CHAIN HUNG. COORDINATE MOUNTING WITH MECHANICAL EQUIPMENT ABOVE.	4'	2.5"	3"		P	LED	4000K		LED DRIVER (0-10V DIMMING)	UNV	43		5000					METALUX (4SNLED-L05-48SL-SLW-UNV-L840-CD1-U)		

ARCH | NEXUS

Architectural NEXUS, Inc.
2505 East Parleys Way
Salt Lake City, UT 84109
T 801.924.5000
http://www.archnexus.com

Original drawings remain the property of the Architect and as such the Architect retains total ownership and control. The design represented by these drawings is sold to the client for a one time use, unless otherwise agreed upon in writing by the Architect. © Architectural Nexus, Inc. 2019

LICENSED PROFESSIONAL ENGINEER
No. 8182456
TYLER M. SQUIRE
STATE OF UTAH
4/13/2021

UNIVERSITY OF UTAH
WILLIAMS BLDG TIER 3 NETWORK NODE INTERFACE REMODEL
UNIVERSITY OF UTAH RESEARCH PARK, CHIPETA WAY
SALT LAKE CITY, UT

#	Date	Revision

PERMIT SET

NEXUS PROJECT #: 20101
CHECKED BY: TDS
DRAWN BY: DBS
DATE: 02.23.2020

AGENCY APPROVAL

INTERIOR LIGHTING FIXTURE SCHEDULE

EL601

5/20/2021 3:44:29 PM

EQUIPMENT/CABLE LIST

THE ITEMS INDICATED BELOW SHALL NOT BE CONSTRUED AS A "BILL OF MATERIALS". THIS LIST IDENTIFIES ITEMS OF SIGNIFICANCE USED DURING THE DESIGN OF THE CABLING INSTALLATION. WHERE THE ITEMS INDICATED ARE ONE PORTION OF AN ASSEMBLY, THE ENTIRE ASSEMBLY SHALL BE PROVIDED UNLESS SPECIFIED OTHERWISE. PROVIDE ALL MISCELLANEOUS HARDWARE AND SUPPORTS WHICH MAY NOT BE LISTED HERE, FOR A COMPLETE INSTALLATION. COMPARE CATALOG NUMBERS WITH DESCRIPTIONS AND NOTIFY ENGINEER OF DISCREPANCIES PRIOR TO BID. IF CATALOG NUMBERS DO NOT MATCH DESCRIPTIONS, THE DESCRIPTIONS TAKE PRECEDENCE. PROVIDE COMPLETE SUBMITTAL FOR APPROVAL PRIOR TO PURCHASING ANY EQUIPMENT OR CABLE. REFER TO SPECIFICATIONS FOR ADDITIONAL REQUIREMENTS.

SYMBOL	ITEM DESCRIPTION	ACCEPTABLE TYPES
	STATION CABLE, DATA - CATEGORY 6, UTP, PLENUM, WHITE, DATA	COMMSCOPE 700208101
2C	DATA OUTLET, SURFACE MOUNT BOX, WHITE, 2 POSITION	COMMSCOPE 108168469
	CATEGORY 6 JACK - DATA, WHITE	COMMSCOPE 700206725
SPP1	STATION PATCH PANEL,MODULAR, 48-PORT, BLACK, 2RU	COMMSCOPE 760187195
	CATEGORY 6 JACK - DATA , WHITE	COMMSCOPE 700206725
HWM	HORIZONTAL WIRE MANAGER, BLACK, 2RU, FRONT ONLY	CHATSWORTH 13930-702
	RAISED FLOOR GROMMET, 6.14"x9" OPENING	KOLDLOK SPLITLOK INTEGRAL 4040
	EQUIPMENT CABINET, 4 POST, 7', 42RU, BLACK (800mm(W) x1200mm(D) x mm(H))	RITTAL 5511.210
	SIDE PANELS (KIT OF 2)	RITTAL 9966.014
	PARTITION WALLS, SINGLE PIECE	RITTAL 9978.380
	CASTERS, (KIT OF 4)	RITTAL 7825.900
	CABLE MANAGEMENT WALL	RITTAL 9978.260
	RACK BAYING KITS	RITTAL 8800.480
PS1	EQUIPMENT RACK POWER STRIP, 208 V, 60A, 3 PHASE, WITH L21-30P, WALTHER ELECTRIC 260409 PLUG	ENLOGIC EP640448-0010
PS2	EQUIPMENT RACK POWER STRIP, 208 V, 30A, SINGLE PHASE, WITH L6-30P INPUT PLUG	ENLOGIC EP61024-0013
	CABLE RUNWAY, 24" BLACK WITH ALL REQUIRED MOUNTING AND SUPPORT ACCESSORIES	CHATSWORTH 10250-718
	BUTT SPLICE KIT, BLACK	CHATSWORTH 11301-001
	JUNCTION SPLICE KIT, BLACK	CHATSWORTH 11302-001
	FOOT KIT, BLACK	CHATSWORTH 11309-701
	END CLOSING KIT, CABLE RUNWAY, BLACK	CHATSWORTH 11700-712
	RUNWAY WALL BRACKETS, BLACK	CHATSWORTH 10608-701
	CABLE RUNWAY ELEVATION KIT, 6"	CHATSWORTH 10506-706
	FIBER GUTTER, 4" X 4" YELLOW WITH ALL REQUIRED MOUNTING ACCESSORIES	PANDUIT FR4X4YLL6
	COUPLER KIT, YELLOW 4"	PANDUIT FRBC4X4LYL
	DOWN SPOUT, YELLOW	PANDUIT FRVT4X4YL
	90 DEGREE ELBOW, YELLOW	PANDUIT FRRA4X4LYL
	MOUNTING KIT	PANDUIT FR6ALB
	TELECOMMUNICATIONS MAIN GROUNDING BUS BAR	
	TELECOMMUNICATIONS GROUNDING BUS BAR	

NOTE: ALL RACKS, LADDER, PATCH PANELS AND ACCESSORIES SHALL BE BLACK IN COLOR.

GENERAL PROJECT NOTES

1. CONTRACTOR TO BE COMMSCOPE SYSTIMAX CERTIFED PRIOR TO TIME OF BID, AND MUST BE ABLE TO PROVIDE TO THE OWNER A 25 YEAR SYSTEM WARRANTY FROM THE MANUFACTURER.
2. UNLESS OTHERWISE NOTED, INSTALL ALL CABLE INSIDE RACEWAY SYSTEMS. WHERE RACEWAY SYSTEMS HAVE NOT BEEN PROVIDED OR SPECIFIED, INSTALL CABLE THROUGH THE SPECIFIED "CADDY" CLIPS AT THE MINIMUM INTERVALS IDENTIFIED IN THE SPECIFICATIONS. SUPPORT "CADDY" CLIPS DIRECTLY FROM THE BUILDING STRUCTURE, NOT FROM OTHER BUILDING SYSTEM SUPPORT WIRES OR CABLE.
3. PROVIDE PLENUM RATED CABLE FOR ALL SPECIFIED CABLE.
4. LABEL ALL CABLE INSTALLED UNDER THIS CONTRACT REGARDLESS OF LENGTH. ACCORDING TO WRITTEN SPECIFICATION.
5. THE EQUIPMENT LABELING IDENTIFIED ON DETAILS IN THESE DRAWINGS ARE EXAMPLES ONLY OF THE ACTUAL LABELING WHICH IS REQUIRED AS PART OF THIS CONTRACT. PRIOR TO FABRICATION, SUBMIT THE NOMENCLATURE FOR ALL LABELS TO THE OWNER FOR REVIEW. THIS REQUIREMENT INCLUDES BUT IS NOT LIMITED TO ALL CABLE LABELING, AND ALL EQUIPMENT LABELING.
6. GROUND ALL EQUIPMENT RACKS LADDER RACK, AND EQUIPMENT INSTALLED UNDER THIS CONTRACT IN COMPLIANCE WITH THE CONTRACT DOCUMENTS AND WRITTEN SPECIFICATION.
7. COORDINATE WITH OWNER I.T. PERSONNEL ON RACK PATCH PANEL DENSITY PRIOR TO ANY CABLE TERMINATION.

ABBREVIATIONS

NOTE: ALL ABBREVIATIONS MAY NOT BE USED.

A - AUGMENTED
ER - EQUIPMENT ROOM
CAT - CATEGORY
E - ENHANCED
EA - EACH
FPP - FIBER PATCH PANEL
GIG - GIGA HERTZ
HWM - HORIZONTAL WIRE MANAGEMENT
TC - TELECOMMUNICATIONS ROOM
NIC - NOT IN CONTRACT
OE - OWNER ELECTRONICS
OFCI - OWNER FURNISHED CONTRACTOR INSTALLED
PNM - PLENUM
PR - PAIR
PS - POWER SUPPLY
RPP - RISER PATCH PANEL
SPP - TYPE S PATCH PANEL
TYP - TYPICAL
VWM - VERTICLE WIRE MANAGEMENT

DEFINITIONS

NOTE: ALL DEFINITIONS MAY NOT BE USED.

INDICATED: THE TERM "INDICATED" REFERS TO GRAPHIC REPRESENTATIONS, NOTES, OR SCHEDULES ON THE DRAWINGS, OTHER PARAGRAPHS OR SCHEDULES IN THE SPECIFICATIONS, AND SIMILAR REQUIREMENTS IN THE CONTRACT DOCUMENTS. WHERE TERMS SUCH AS "SHOWN", "NOTED", "SCHEDULED", AND "SPECIFIED" ARE USED, IT IS TO HELP THE READER LOCATE THE REFERENCE, NO LIMITATION ON LOCATION IS INTENDED.

DIRECTED: TERMS SUCH AS "DIRECTED", "REQUESTED", AUTHORIZED", "SELECTED", "APPROVED", "REQUIRED", AND "PERMITTED" MEAN "DIRECTED BY THE ENGINEER", "REQUESTED BY THE ENGINEER", AND SIMILAR PHRASES.

APPROVE: THE TERM "APPROVED", WHERE USED IN CONJUNCTION WITH THE ENGINEER'S ACTION ON THE CONTRACTOR'S SUBMITTALS, APPLICATIONS, AND REQUESTS, IS LIMITED TO THE ENGINEER'S DUTIES AND RESPONSIBILITIES AS STATED IN GENERAL AND SUPPLEMENTARY CONDITIONS.

FURNISH: THE TERM "FURNISH" IS USED TO MEAN "SUPPLY AND DELIVER TO THE PROJECT SITE, READY FOR UNLOADING, UNPACKING, ASSEMBLY, INSTALLATION, AND SIMILAR OPERATIONS."

INSTALL: THE TERM "INSTALL" IS USED TO DESCRIBE OPERATIONS AT PROJECT SITE INCLUDING THE ACTUAL "UNLOADING, UNPACKING, ASSEMBLY, ERECTION, PLACING, ANCHORING, APPLYING, WORKING TO DIMENSION, FINISHING, CURING, PROTECTING, CLEANING, AND SIMILAR OPERATIONS."

PROVIDE: THE TERM "PROVIDE" MEANS "TO FURNISH AND INSTALL, COMPLETE AND READY FOR THE INTENDED USE."

INSTALLER: AN "INSTALLER" IS THE CONTRACTOR OR AN ENTITY ENGAGED BY THE CONTRACTOR, EITHER AS AN EMPLOYEE, SUBCONTRACTOR, OR SUB-SUBCONTRACTOR, FOR PERFORMANCE OF A PARTICULAR CONSTRUCTION ACTIVITY, INCLUDING INSTALLATION, ERECTION, APPLICATION, AND SIMILAR OPERATIONS. INSTALLERS ARE REQUIRED TO BE EXPERIENCED IN THE OPERATIONS THEY ARE ENGAGED TO PERFORM.

ELECTRONIC SYSTEMS: THE TERM "ELECTRONIC SYSTEMS" IS USED TO DESCRIBE ALL LOW VOLTAGE SYSTEMS GENERALLY REFERRED TO AS "SPECIAL SYSTEMS". THESE SYSTEMS INCLUDE BUT ARE NOT NECESSARILY LIMITED TO ALL SYSTEMS WHICH UTILIZE VOLTAGES OF LESS THAN 71 VOLTS SUCH AS SOUND SYSTEMS, VIDEO SYSTEMS, TV SYSTEMS, SECURITY SYSTEMS, VOICE AND DATA CABLING SYSTEMS, ETC...

AGENCY APPROVAL

ARCH | NEXUS

Architectural NEXUS, Inc.
2505 East Parleys Way
Salt Lake City, UT 84109
T 801.924.5000
http://www.archnexus.com

Original drawings remain the property of the Architect and as such the Architect retains total ownership and control. The design represented by these drawings is sold to the client for a one time use, unless otherwise agreed upon in writing by the Architect. © Architectural Nexus, Inc. 2019

LICENSED PROFESSIONAL ENGINEER
No. 8182456
TYLER J. SQUIRE
STATE OF UTAH
4/13/2021

UNIVERSITY OF UTAH
WILLIAMS BLDG TIER 3 NETWORK NODE INTERFACE REMODEL
UNIVERSITY OF UTAH RESEARCH PARK, CHIPETA WAY
SALT LAKE CITY, UT

#	Date	Revision

PERMIT SET

NEXUS PROJECT #: 20101
CHECKED BY: JDA
DRAWN BY: SJT
DATE: 02.23.2020

TELECOM SCHEDULES AND NOTES

ET001

5/20/2021 3:45:13 PM

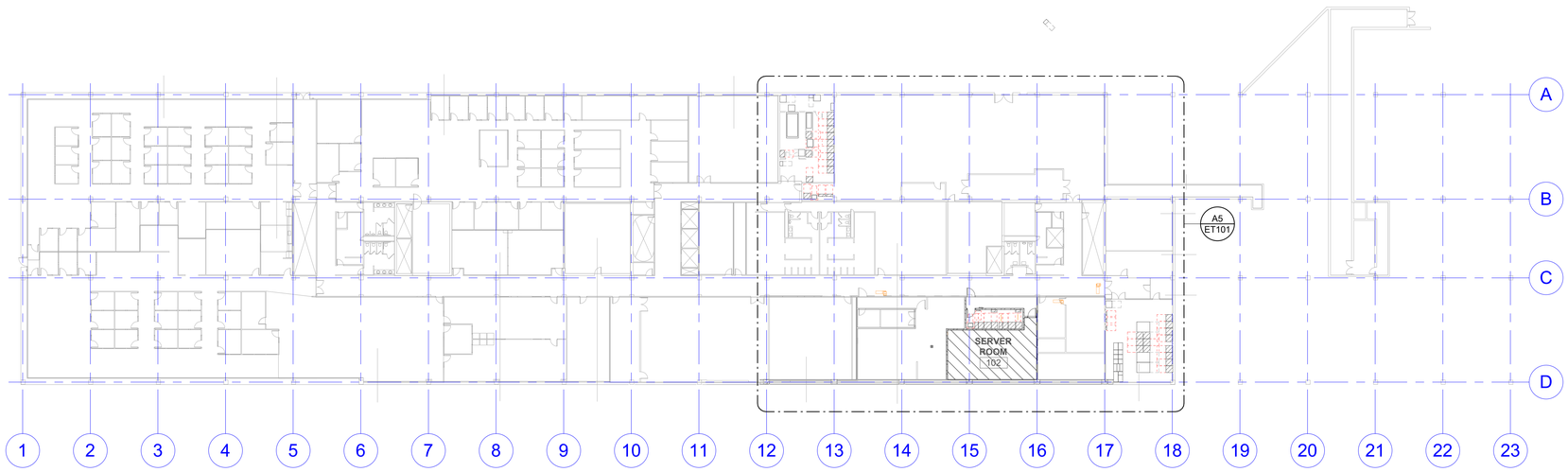

A5 LEVEL 1 OVERALL TELECOM PLAN
SCALE: 1" = 30'-0"

5/20/2021 3:45:14 PM

ARCH | NEXUS

Architectural NEXUS, Inc.
2505 East Parleys Way
Salt Lake City, UT 84109
T 801.924.5000
http://www.archnexus.com

Original drawings remain the property of the Architect and as such the Architect retains total ownership and control. The design represented by these drawings is sold to the client for a one time use, unless otherwise agreed upon in writing by the Architect.
© Architectural Nexus, Inc. 2019

LICENSED PROFESSIONAL ENGINEER
No. 8182456
TYLER MAGUIRE
STATE OF UTAH
4/13/2021

UNIVERSITY OF UTAH
WILLIAMS BLDG TIER 3 NETWORK NODE INTERFACE REMODEL
UNIVERSITY OF UTAH RESEARCH PARK, CHIPETA WAY
SALT LAKE CITY, UT

#	Date	Revision

PERMIT SET

NEXUS PROJECT #: 20101
CHECKED BY: JDA
DRAWN BY: SJT
DATE: 02.23.2020

AGENCY APPROVAL

OVERALL LEVEL 1 TELECOM PLAN

ET100

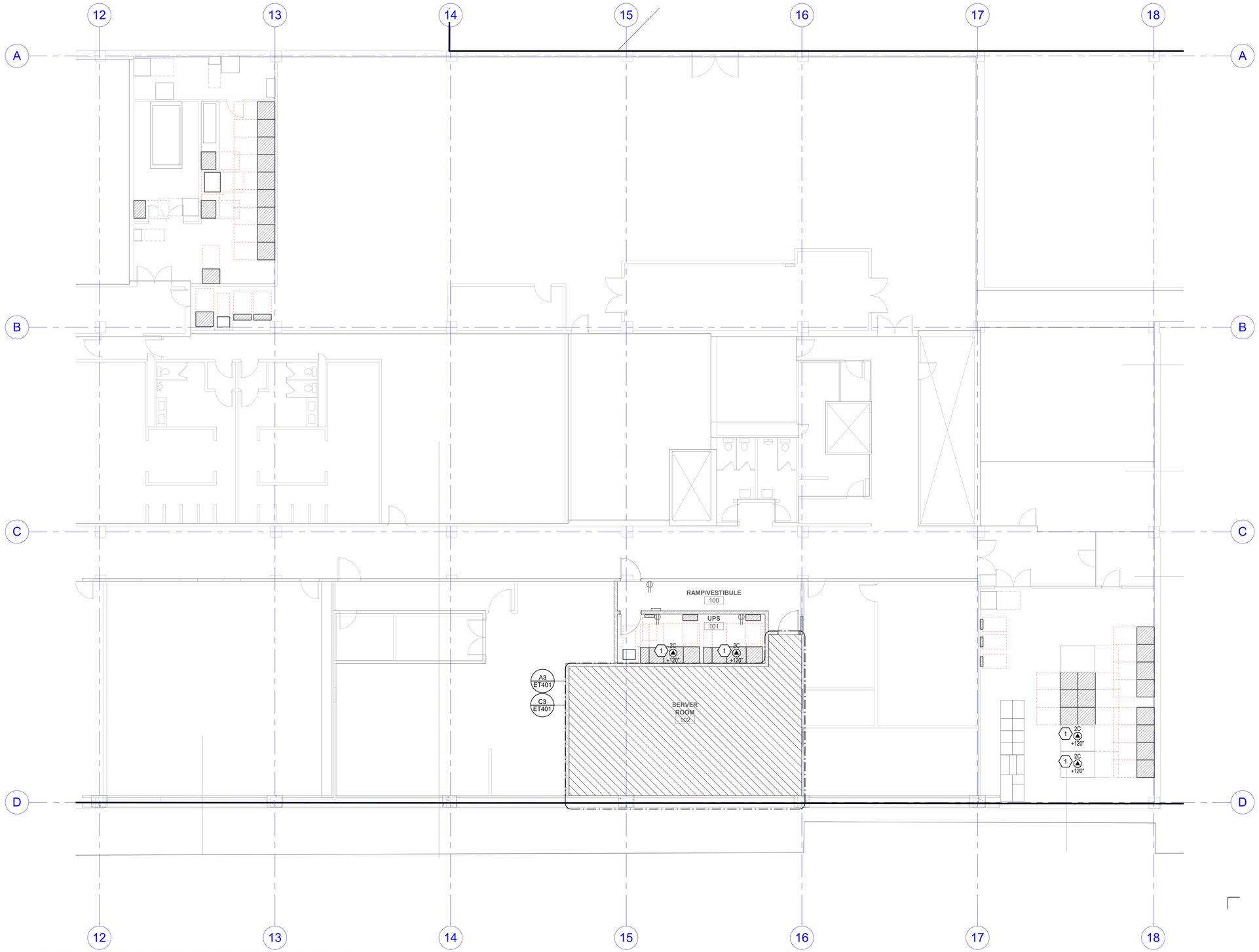

A5 LEVEL 1 ENLARGED AREA TELECOM PLAN
SCALE: 1/8" = 1'-0"

SHEET KEYNOTES

1 COORDINATE EXACT TERMINATION LOCATION OF DATA DEVICE IN OPEN CEILING WITH ELECTRICAL CONTRACTOR.

ARCH | NEXUS

Architectural NEXUS, Inc.
2505 East Parleys Way
Salt Lake City, UT 84109
T 801.924.5000
http://www.archnexus.com

Original drawings remain the property of the Architect and as such the Architect retains total ownership and control. The design represented by these drawings is sold to the client for a one time use, unless otherwise agreed upon in writing by the Architect.
© Architectural Nexus, Inc. 2019

LICENSED PROFESSIONAL ENGINEER
No. 8182456
TYLER MCGUIRE
STATE OF UTAH
4/13/2021

UNIVERSITY OF UTAH
WILLIAMS BLDG TIER 3 NETWORK NODE INTERFACE REMODEL
UNIVERSITY OF UTAH RESEARCH PARK, CHIPETA WAY
SALT LAKE CITY, UT

#	Date	Revision

PERMIT SET

NEXUS PROJECT #: 20101
CHECKED BY: JDA
DRAWN BY: SJT
DATE: 02.23.2020

AGENCY APPROVAL

LEVEL 1 TELECOM PLAN

ET101

5/20/2021 3:45:17 PM

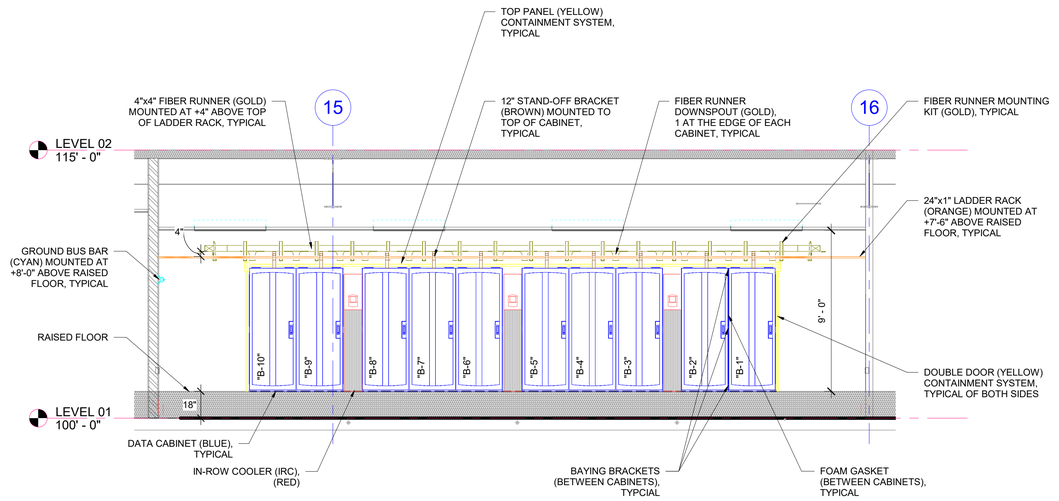

C3 TELECOM SECTION DETAIL - ROW B

SCALE: 1/4" = 1'-0"

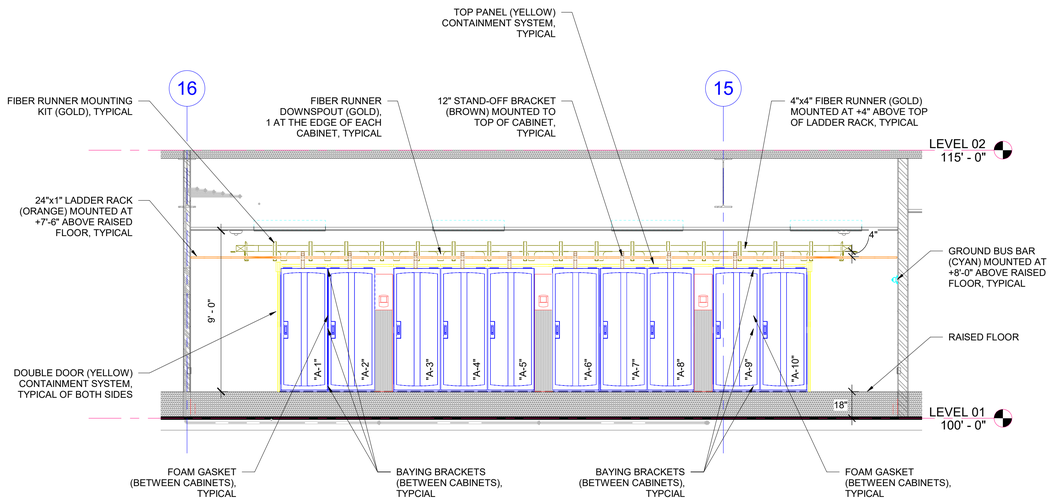

A3 TELECOM SECTION DETAIL - ROW A

SCALE: 1/4" = 1'-0"

ARCH | NEXUS

Architectural NEXUS, Inc.
2505 East Parleys Way
Salt Lake City, UT 84109
T 801.924.5000
http://www.archnexus.com

Original drawings remain the property of the Architect and as such the Architect retains total ownership and control. The design represented by these drawings is sold to the client for a one time use, unless otherwise agreed upon in writing by the Architect.
© Architectural Nexus, Inc. 2019

LICENSED PROFESSIONAL ENGINEER
No. 8182456
TYLER SQUIRE
STATE OF UTAH
4/13/2021

UNIVERSITY OF UTAH
WILLIAMS BLDG TIER 3 NETWORK NODE INTERFACE REMODEL

UNIVERSITY OF UTAH RESEARCH PARK, CHIPETA WAY
SALT LAKE CITY, UT

#	Date	Revision

AGENCY APPROVAL

PERMIT SET

NEXUS PROJECT #: 20101
CHECKED BY: JDA
DRAWN BY: SJT
DATE: 02.23.2020

ENLARGED SERVER 102 SECTION DETAILS

ET301

5/20/2021 3:45:25 PM

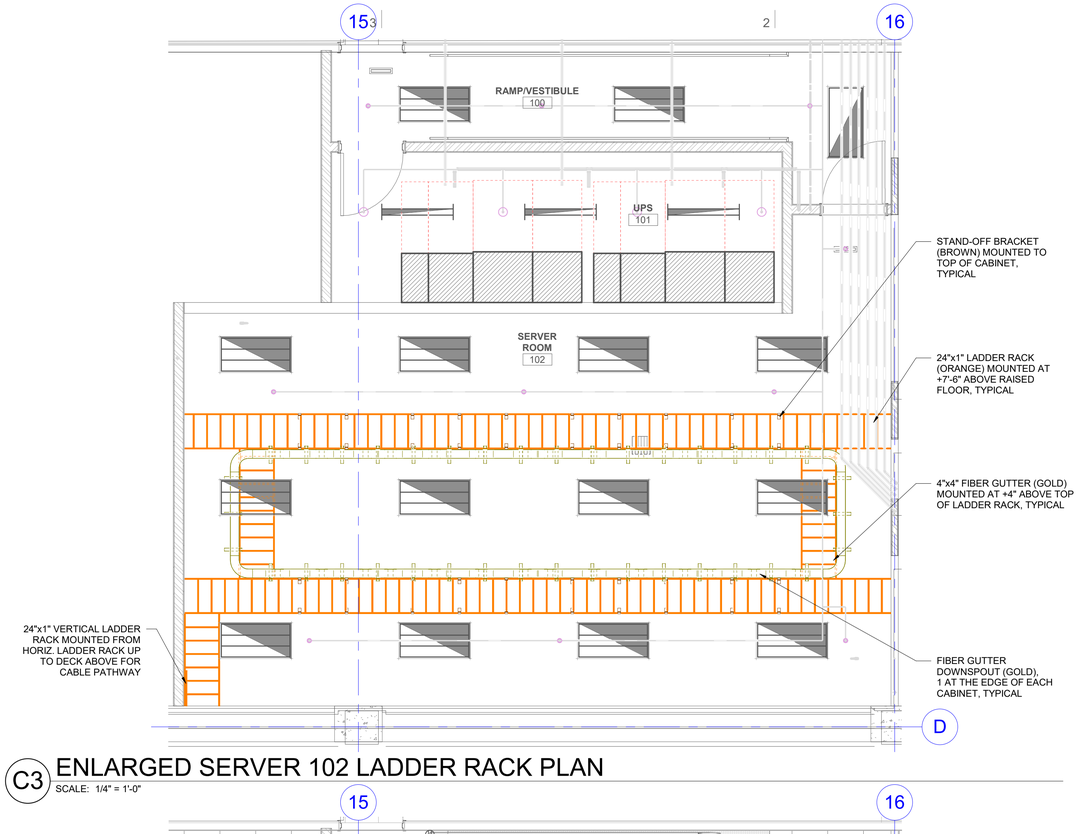

C3 ENLARGED SERVER 102 LADDER RACK PLAN

SCALE: 1/4" = 1'-0"

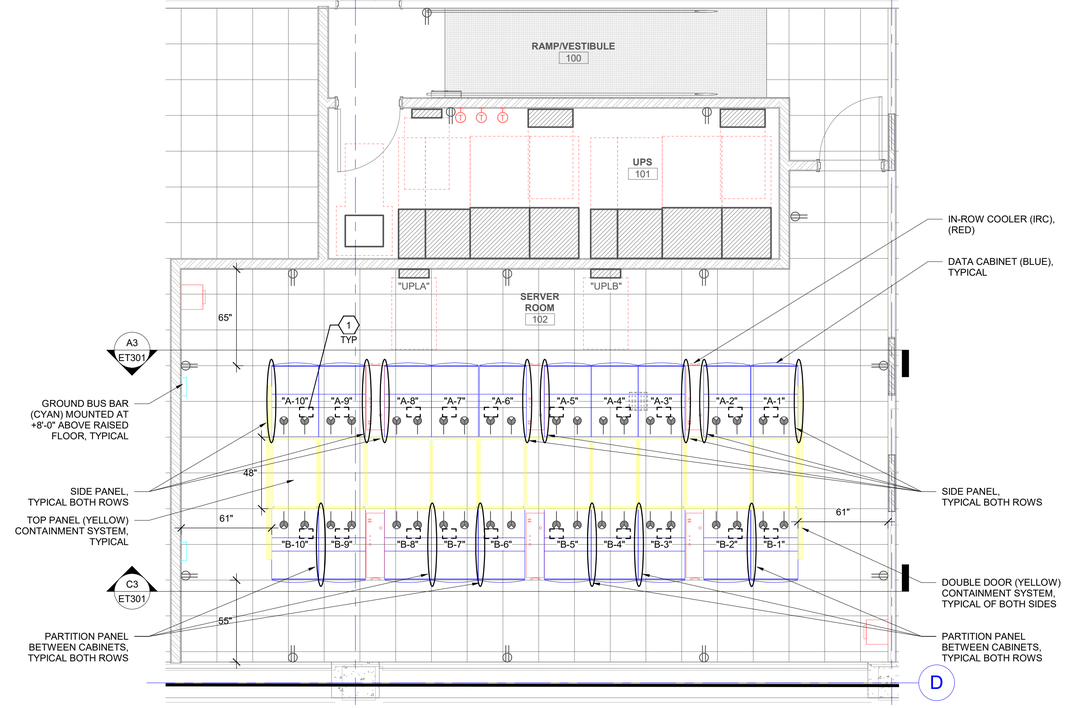

A3 ENLARGED SERVER 102 EQUIPMENT RACK PLAN

SCALE: 1/4" = 1'-0"

SHEET KEYNOTES

1 CONTRACTOR TO FIELD VERIFY EXACT PLACEMENT OF KOLD LOCK PASS THROUGH IN EACH CABINET LOCATION. SEE DETAIL C2/ET505 FOR MORE INFORMATION.

ARCH | NEXUS

Architectural NEXUS, Inc.
2505 East Parleys Way
Salt Lake City, UT 84109
T 801.924.5000
http://www.archnexus.com

Original drawings remain the property of the Architect and as such the Architect retains total ownership and control. The design represented by these drawings is sold to the client for a one time use, unless otherwise agreed upon in writing by the Architect.
© Architectural Nexus, Inc. 2019

LICENSED PROFESSIONAL ENGINEER
No. 8182456
TYLER SQUIRE
STATE OF UTAH
4/13/2021

UNIVERSITY OF UTAH

WILLIAMS BLDG TIER 3 NETWORK NODE INTERFACE REMODEL

UNIVERSITY OF UTAH RESEARCH PARK, CHIPETA WAY
SALT LAKE CITY, UT

#	Date	Revision

AGENCY APPROVAL

PERMIT SET

NEXUS PROJECT #: 20101
CHECKED BY: JDA
DRAWN BY: SJT
DATE: 02.23.2020

ENLARGED SERVER 102 PLANS

ET401

5/20/2021 3:45:30 PM

ARCH | NEXUS

Architectural NEXUS, Inc.
2505 East Parleys Way
Salt Lake City, UT 84109
T 801.924.5000
http://www.archnexus.com

Original drawings remain the property of the Architect and as such the Architect retains total ownership and control. The design represented by these drawings is sold to the client for a one time use, unless otherwise agreed upon in writing by the Architect.
© Architectural Nexus, Inc. 2019

LICENSED PROFESSIONAL ENGINEER
No. 8182456
TYLER SQUIRE
STATE OF UTAH
4/13/2021

UNIVERSITY OF UTAH
WILLIAMS BLDG TIER 3 NETWORK NODE INTERFACE REMODEL
UNIVERSITY OF UTAH RESEARCH PARK, CHIPETA WAY
SALT LAKE CITY, UT

#	Date	Revision

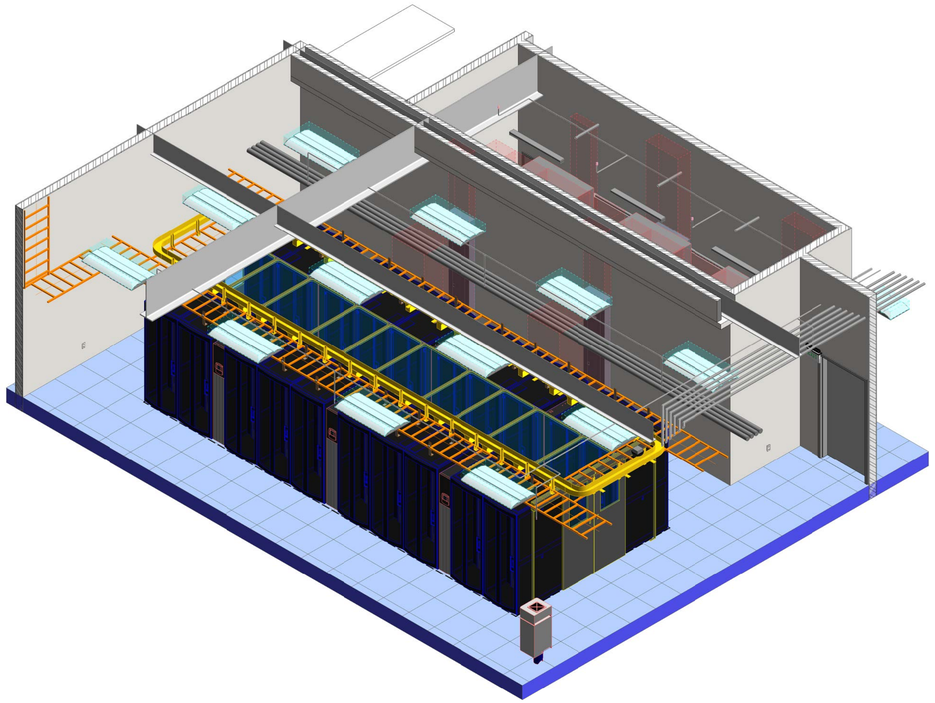

A3 ENLARGED SERVER 102 ISOMETRIC PLAN
SCALE:

AGENCY APPROVAL

PERMIT SET

NEXUS PROJECT #: 20101
CHECKED BY: JDA
DRAWN BY: SJT
DATE: 02.23.2020

ENLARGED SERVER 102 PLANS

ET402

5/20/2021 3:45:37 PM

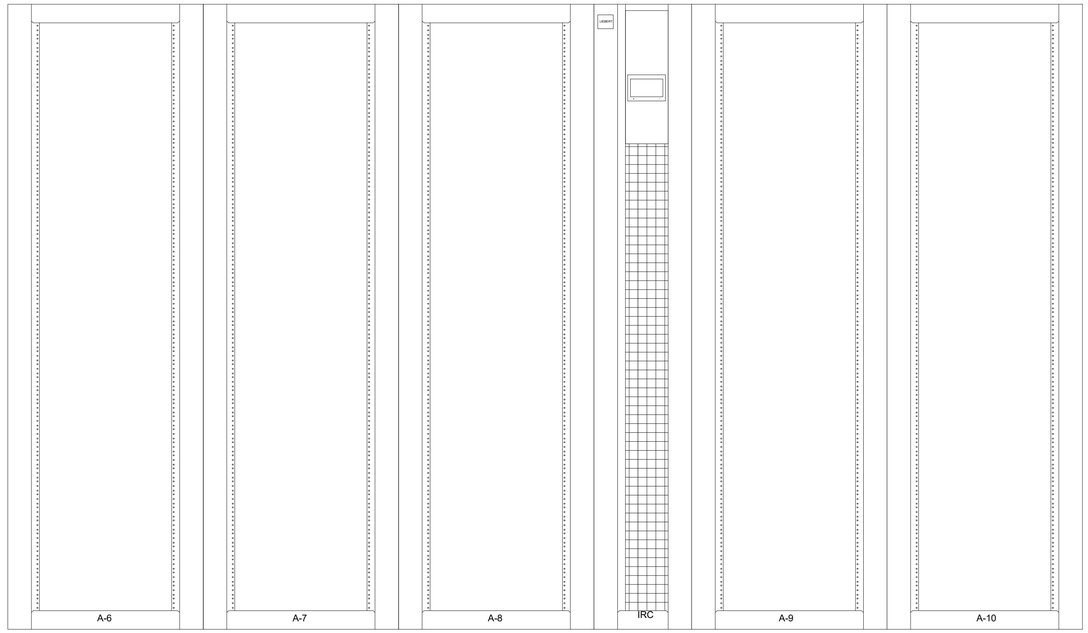

C5 TELECOM EQUIPMENT RACK ELEVATION, ROW A, FRONT, A-6 - A-10, SERVER 102

NO SCALE

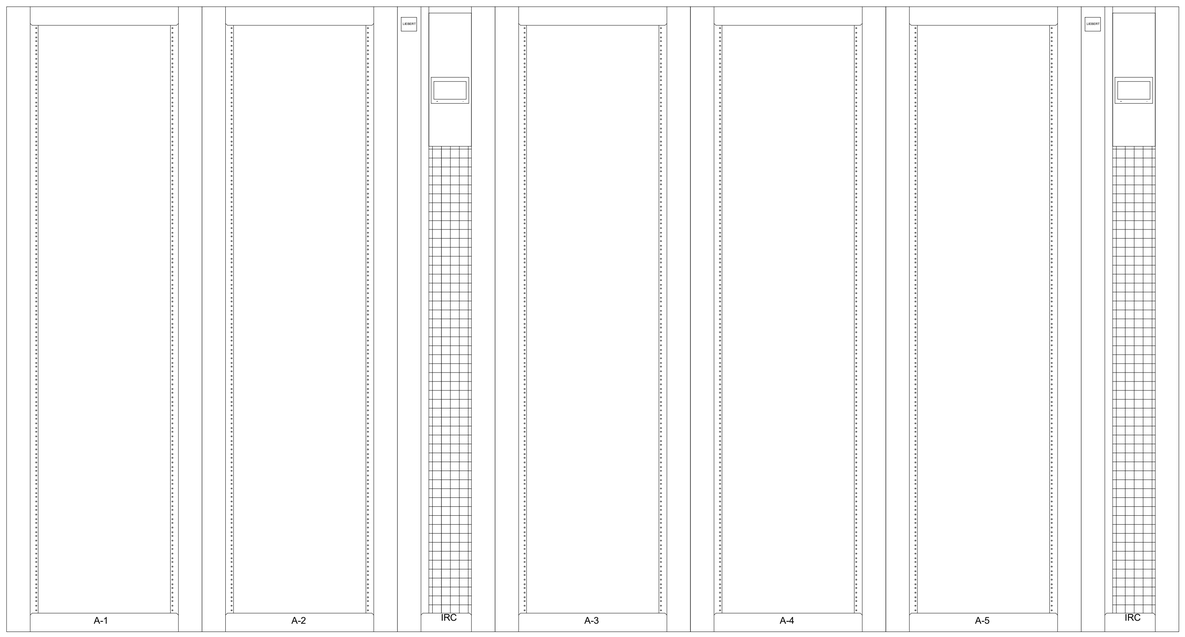

A5 TELECOM EQUIPMENT RACK ELEVATION, ROW A, FRONT, A-1 - A-5, SERVER 102

NO SCALE

SHEET KEYNOTES

1. COORDINATE WITH UIT ON EXACT RACK ELEVATIONS AND PLACEMENT OF RACK MOUNTED EQUIPMENT PRIOR TO INSTALLATION. RACK ELEVATIONS SHOWN ARE FOR REPRESENTATIONAL PURPOSE ONLY. CONTACT: TIM GOODALE, TIM.GOODALE@UTAH.EDU, MOBILE NUMBER, 801-500-5362.

ARCH | NEXUS

Architectural NEXUS, Inc.
2505 East Parleys Way
Salt Lake City, UT 84109
T 801.924.5000
http://www.archnexus.com

Original drawings remain the property of the Architect and as such the Architect retains total ownership and control. The design represented by these drawings is sold to the client for a one time use, unless otherwise agreed upon in writing by the Architect.
© Architectural Nexus, Inc. 2019

LICENSED PROFESSIONAL ENGINEER
No. 8182456
TYLER J. MCGUIRE
STATE OF UTAH
4/13/2021

UNIVERSITY OF UTAH
WILLIAMS BLDG TIER 3 NETWORK NODE INTERFACE REMODEL
UNIVERSITY OF UTAH RESEARCH PARK, CHIPETA WAY
SALT LAKE CITY, UT

#	Date	Revision

PERMIT SET

NEXUS PROJECT #: 20101
CHECKED BY: JDA
DRAWN BY: SJT
DATE: 02.23.2020

AGENCY APPROVAL

TELECOM EQUIPMENT RACK ELEVATIONS

ET501

5/20/2021 3:45:38 PM

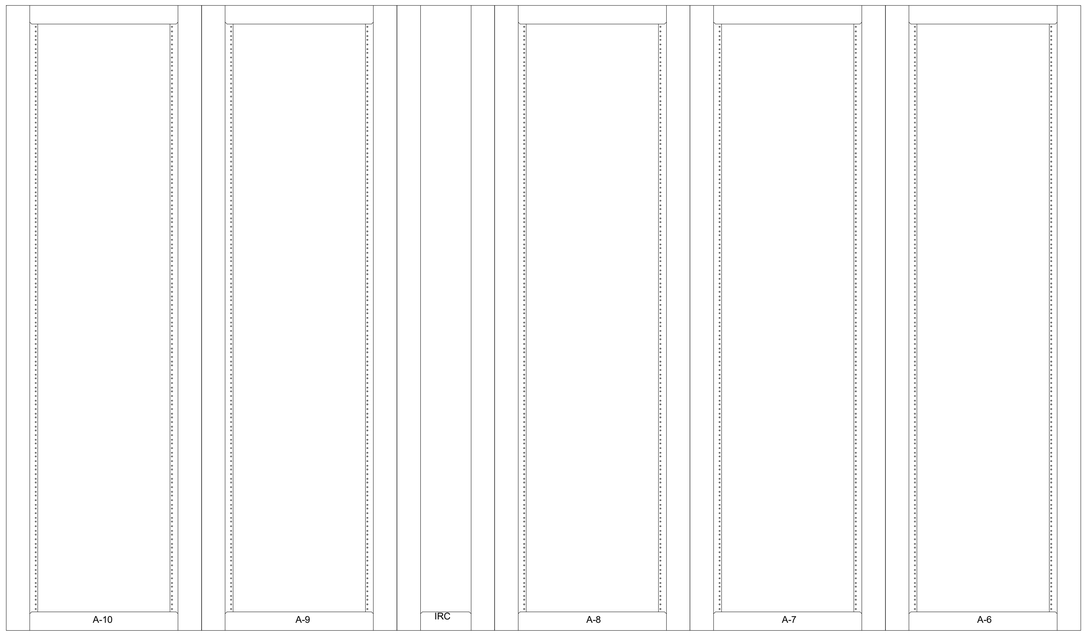

C5 TELECOM EQUIPMENT RACK ELEVATION, ROW A, REAR, A-6 - A-10, SERVER 102

NO SCALE

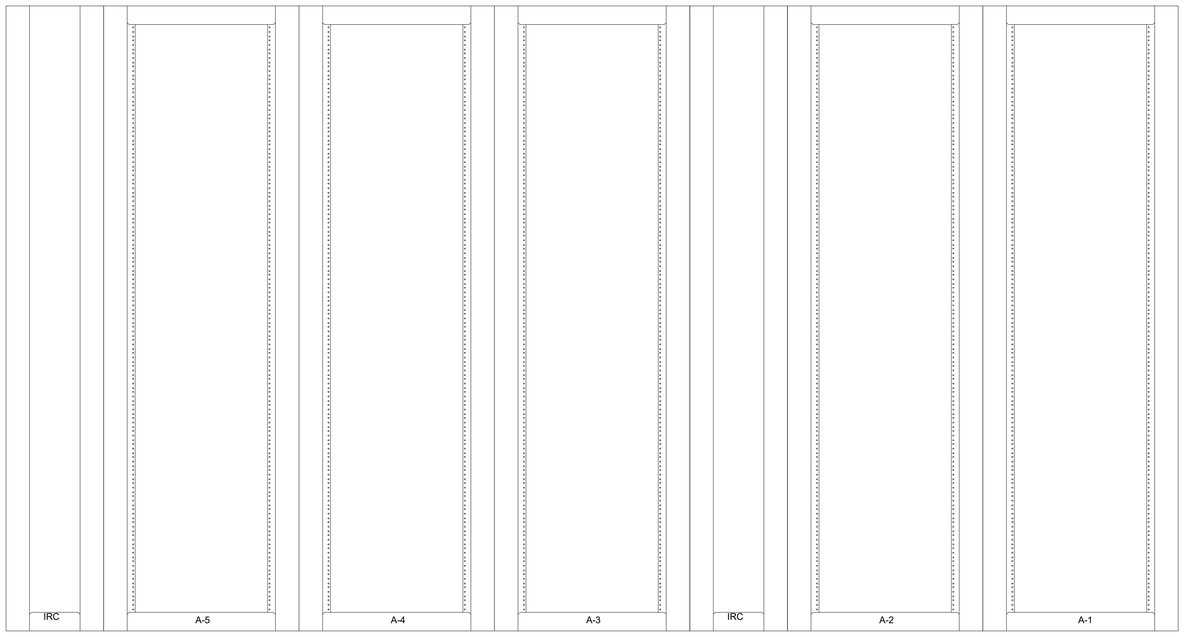

A5 TELECOM EQUIPMENT RACK ELEVATION, ROW A, REAR, A-1 - A-5, SERVER 102

NO SCALE

SHEET KEYNOTES

1. COORDINATE WITH UIT ON EXACT RACK ELEVATIONS AND PLACEMENT OF RACK MOUNTED EQUIPMENT PRIOR TO INSTALLATION. RACK ELEVATIONS SHOWN ARE FOR REPRESENTATIONAL PURPOSE ONLY. CONTACT: TIM GOODALE, TIM.GOODALE@UTAH.EDU, MOBILE NUMBER, 801-500-5362.

ARCH | NEXUS

Architectural NEXUS, Inc.
2505 East Parleys Way
Salt Lake City, UT 84109
T 801.924.5000
http://www.archnexus.com

Original drawings remain the property of the Architect and as such the Architect retains total ownership and control. The design represented by these drawings is sold to the client for a one time use, unless otherwise agreed upon in writing by the Architect.
© Architectural Nexus, Inc. 2019

LICENSED PROFESSIONAL ENGINEER
No. 8182456
TYLER MAGUIRE
STATE OF UTAH
4/13/2021

UNIVERSITY OF UTAH
WILLIAMS BLDG TIER 3 NETWORK NODE INTERFACE REMODEL
UNIVERSITY OF UTAH RESEARCH PARK, CHIPETA WAY
SALT LAKE CITY, UT

#	Date	Revision

PERMIT SET

NEXUS PROJECT #: 20101
CHECKED BY: JDA
DRAWN BY: SJT
DATE: 02.23.2020

AGENCY APPROVAL

TELECOM EQUIPMENT RACK ELEVATIONS

ET502

5/20/2021 3:45:39 PM

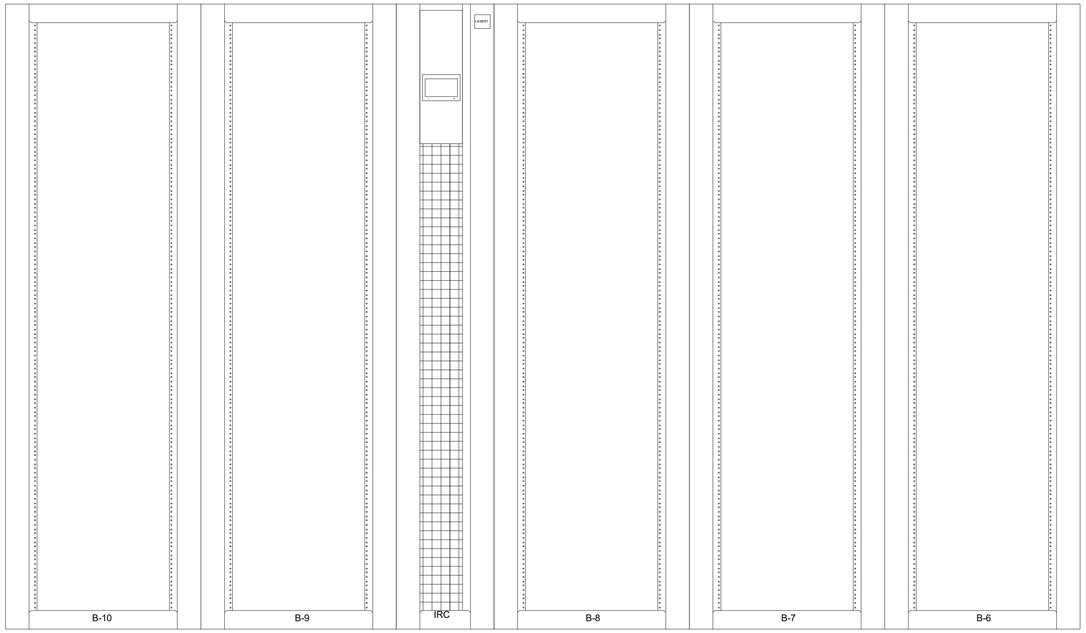

C5 TELECOM EQUIPMENT RACK ELEVATION, ROW B, FRONT, B-6 - B-10, SERVER 102

NO SCALE

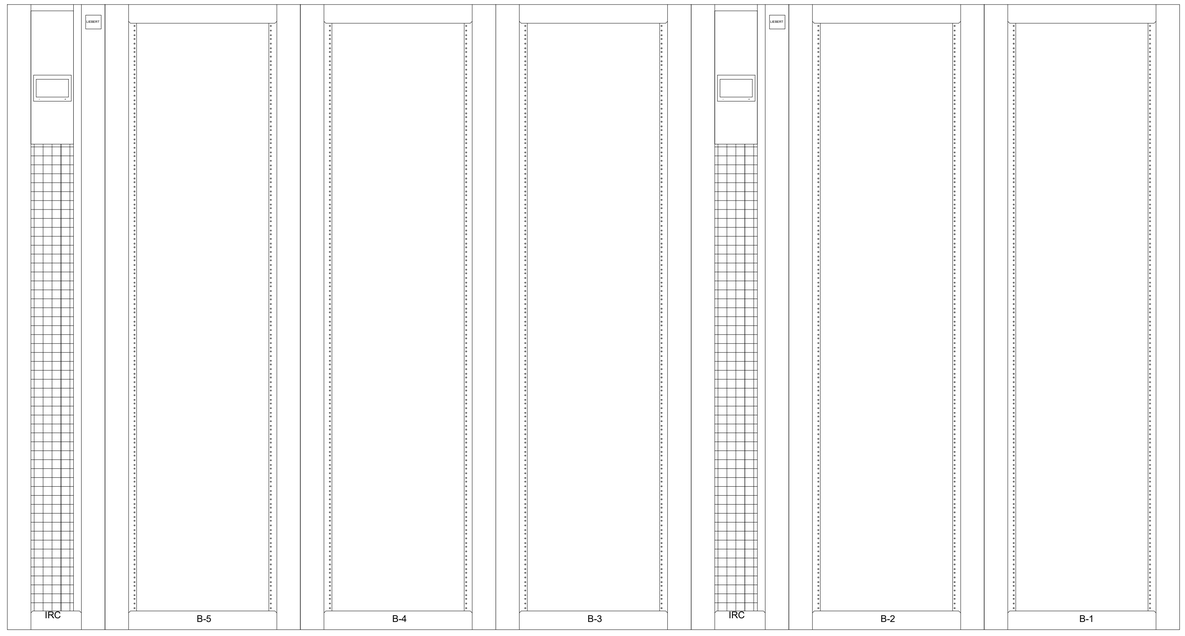

A5 TELECOM EQUIPMENT RACK ELEVATION, ROW B, FRONT, B-1 - B-5, SERVER 102

NO SCALE

SHEET KEYNOTES

1. COORDINATE WITH UIT ON EXACT RACK ELEVATIONS AND PLACEMENT OF RACK MOUNTED EQUIPMENT PRIOR TO INSTALLATION. RACK ELEVATIONS SHOWN ARE FOR REPRESENTATIONAL PURPOSE ONLY. CONTACT: TIM GOODALE, TIM.GOODALE@UTAH.EDU, MOBILE NUMBER, 801-500-5362.

ARCH | NEXUS

Architectural NEXUS, Inc.
2505 East Parleys Way
Salt Lake City, UT 84109
T 801.924.5000
http://www.archnexus.com

Original drawings remain the property of the Architect and as such the Architect retains total ownership and control. The design represented by these drawings is sold to the client for a one time use, unless otherwise agreed upon in writing by the Architect.
© Architectural Nexus, Inc. 2019

LICENSED PROFESSIONAL ENGINEER
No. 8182456
TYLER MCGUIRE
STATE OF UTAH
4/13/2021

UNIVERSITY OF UTAH
WILLIAMS BLDG TIER 3 NETWORK NODE INTERFACE REMODEL
UNIVERSITY OF UTAH RESEARCH PARK, CHIPETA WAY
SALT LAKE CITY, UT

#	Date	Revision

PERMIT SET

NEXUS PROJECT #: 20101
CHECKED BY: JDA
DRAWN BY: SJT
DATE: 02.23.2020

AGENCY APPROVAL

TELECOM EQUIPMENT RACK ELEVATIONS

ET503

5/20/2021 3:45:39 PM

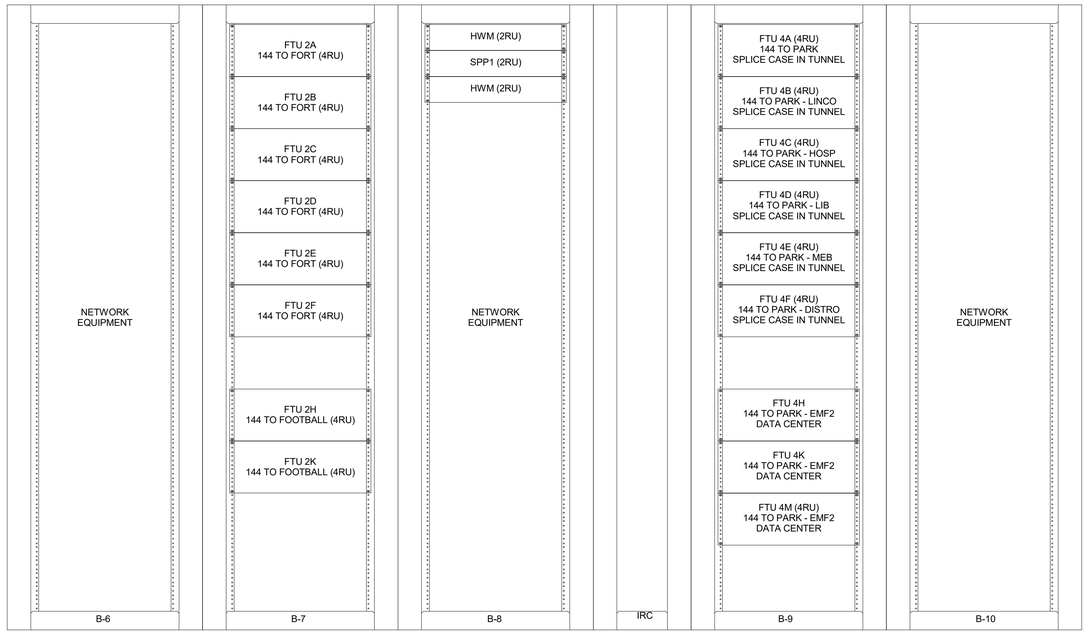

C5 TELECOM EQUIPMENT RACK ELEVATION, ROW B, REAR, B-6 - B-10, SERVER 102

NO SCALE

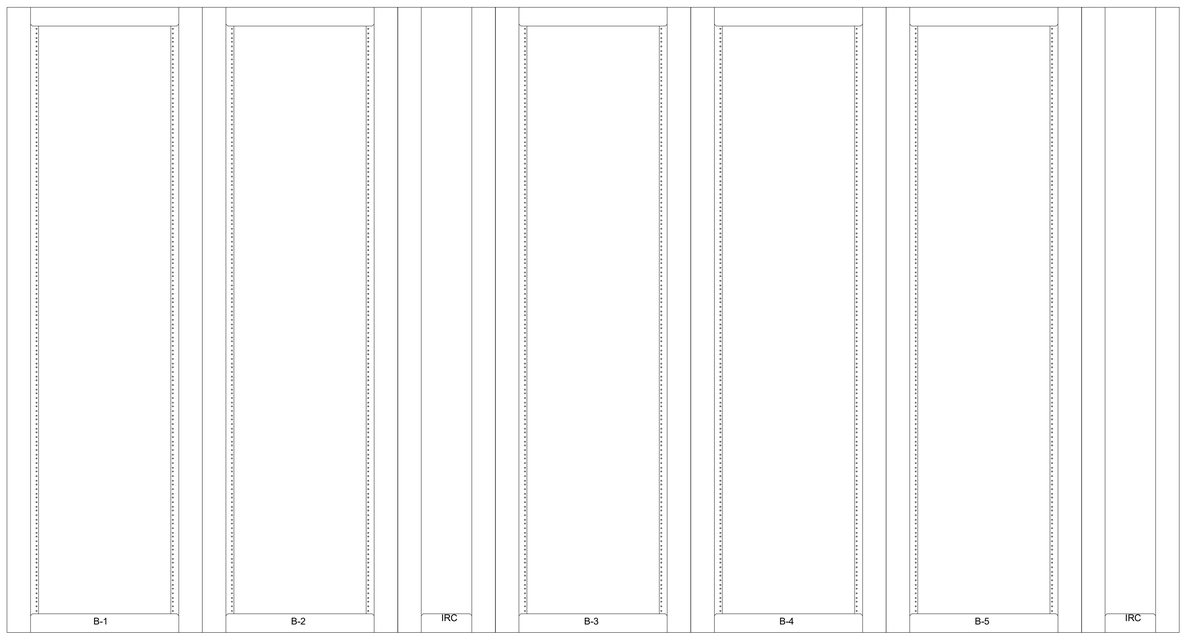

A5 TELECOM EQUIPMENT RACK ELEVATION, ROW B, REAR, B-1 - B-5, SERVER 102

NO SCALE

SHEET KEYNOTES

1. COORDINATE WITH UIT ON EXACT RACK ELEVATIONS AND PLACEMENT OF RACK MOUNTED EQUIPMENT PRIOR TO INSTALLATION. RACK ELEVATIONS SHOWN ARE FOR REPRESENTATIONAL PURPOSE ONLY. CONTACT: TIM GOODALE, TIM.GOODALE@UTAH.EDU, MOBILE NUMBER, 801-500-5362.

ARCH | NEXUS

Architectural NEXUS, Inc.
2505 East Parleys Way
Salt Lake City, UT 84109
T 801.924.5000
http://www.archnexus.com

Original drawings remain the property of the Architect and as such the Architect retains total ownership and control. The design represented by these drawings is sold to the client for a one time use, unless otherwise agreed upon in writing by the Architect. © Architectural Nexus, Inc. 2019

LICENSED PROFESSIONAL ENGINEER
No. 8182456
TYLER J. SQUIRE
STATE OF UTAH
4/13/2021

UNIVERSITY OF UTAH

WILLIAMS BLDG TIER 3 NETWORK NODE INTERFACE REMODEL

UNIVERSITY OF UTAH RESEARCH PARK, CHIPETA WAY SALT LAKE CITY, UT

#	Date	Revision

PERMIT SET

NEXUS PROJECT #: 20101
CHECKED BY: JDA
DRAWN BY: SJT
DATE: 02.23.2020

AGENCY APPROVAL

TELECOM EQUIPMENT RACK ELEVATIONS

ET504

5/20/2021 3:45:40 PM

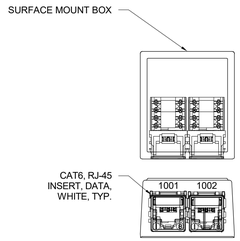

D3 DATA OUTLET
NO SCALE
2C

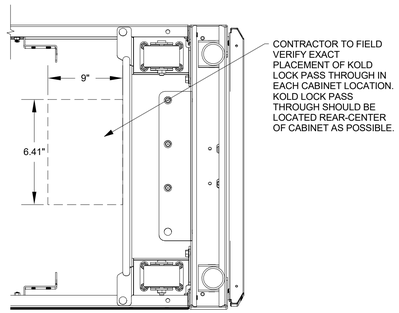

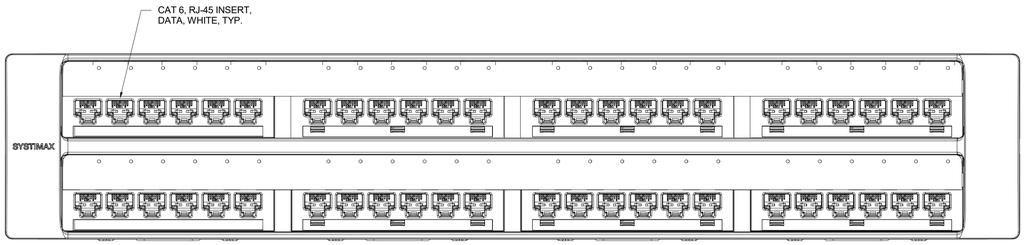

C5 STATION PATCH PANEL, TYPICAL SPP1
NO SCALE

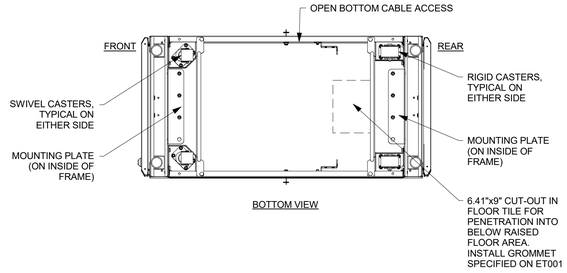

C2 TYPICAL 6"x6" EQUIPMENT RACK PENETRATION DETAIL
NO SCALE

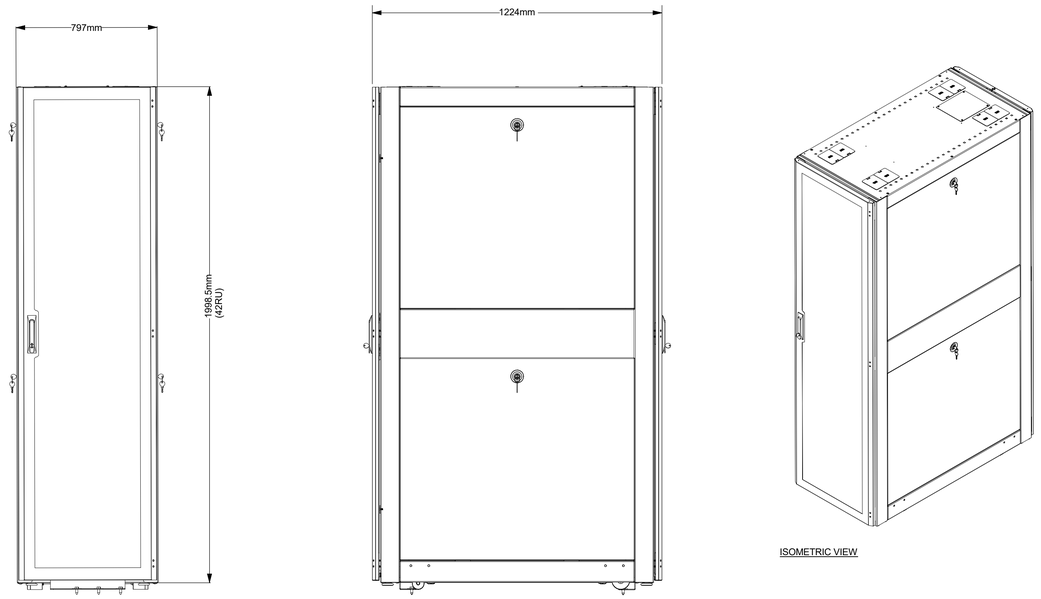

A5 TYPICAL EQUIPMENT CABINET DETAIL
NO SCALE

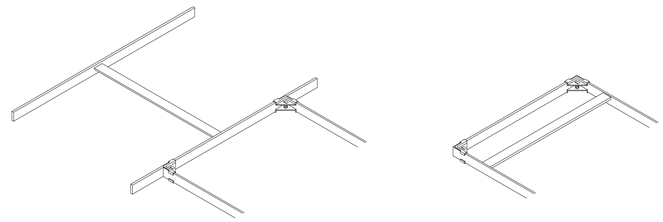

B2 CABLE RUNWAY END/ CLOSING SPLICE DETAIL
NO SCALE

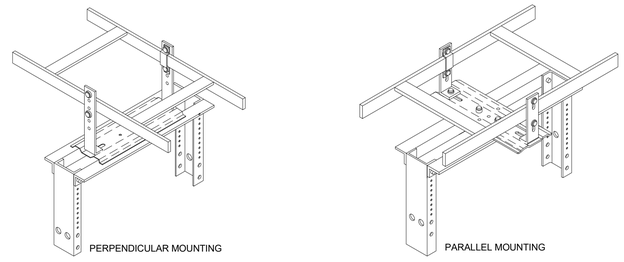

A2 6" CHANNEL RACK-TO-RUNWAY MOUNTING PLATE
NO SCALE

ARCH | NEXUS
Architectural NEXUS, Inc.
2505 East Parleys Way
Salt Lake City, UT 84109
T 801.924.5000
http://www.archnexus.com

Original drawings remain the property of the Architect and as such the Architect retains total ownership and control. The design represented by these drawings is sold to the client for a one time use, unless otherwise agreed upon in writing by the Architect.
© Architectural Nexus, Inc. 2019

LICENSED PROFESSIONAL ENGINEER
No. 8182456
TYLER MCGUIRE
STATE OF UTAH
4/13/2021

UNIVERSITY OF UTAH
WILLIAMS BLDG TIER 3 NETWORK NODE INTERFACE REMODEL
UNIVERSITY OF UTAH RESEARCH PARK, CHIPETA WAY
SALT LAKE CITY, UT

#	Date	Revision

PERMIT SET

NEXUS PROJECT #: 20101
CHECKED BY: JDA
DRAWN BY: SJT
DATE: 02.23.2020

AGENCY APPROVAL

TELECOM DETAILS

ET505

5/20/2021 3:45:41 PM

GENERAL NOTES:

1. ALL LOW VOLTAGE COMMUNICATIONS CONDUIT SHALL BE GROUNDED TO BASKET TRAY OR TELECOMMUNICATIONS GROUNDING BUS BAR.
2. "TMGB" SHOULD BE 1/4"x4"x24".
3. "TGB" SHOULD BE 1/4"x2"x24".
4. EMT CONDUIT GROUNDING CLAMP SHOULD BE ELECTROLYTIC CAST BRONZE. PANDUIT PART NUMBER GPL-"X"-"X", OR EQUAL.
5. RIGID CONDUIT GROUND CLAMP SHOULD BE O-Z/GEDNEY BLG-XXXX, OR HBLG-XXXX, OR EQUAL.
6. GROUNDING LUGS SHOULD BE TWO HOLE LONG BARREL LUGS. PANDUIT PART NUMBER LCC6, OR EQUAL.

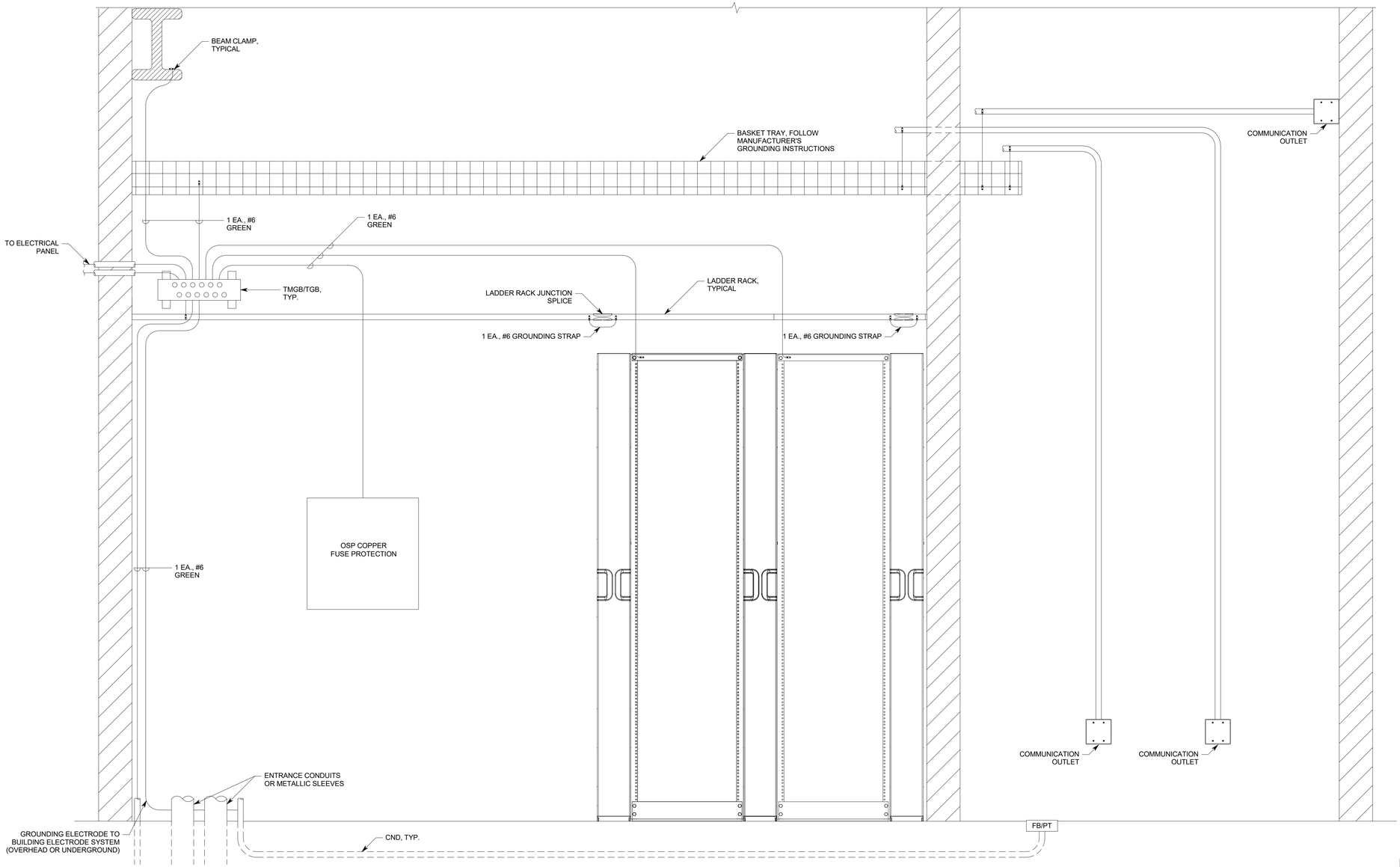

A5 TELECOM EQUIPMENT RACK GROUNDING DETAIL

NO SCALE

5/20/2021 3:45:42 PM

ARCH | NEXUS

Architectural NEXUS, Inc.
2505 East Parleys Way
Salt Lake City, UT 84109
T 801.924.5000
http://www.archnexus.com

Original drawings remain the property of the Architect and as such the Architect retains total ownership and control. The design represented by these drawings is sold to the client for a one time use, unless otherwise agreed upon in writing by the Architect.
© Architectural Nexus, Inc. 2019

LICENSED PROFESSIONAL ENGINEER
No. 8182456-
TYLER MCGUIRE
STATE OF UTAH
4/13/2021

UNIVERSITY OF UTAH
WILLIAMS BLDG TIER 3 NETWORK NODE INTERFACE REMODEL
UNIVERSITY OF UTAH RESEARCH PARK, CHIPETA WAY
SALT LAKE CITY, UT

#	Date	Revision

PERMIT SET

NEXUS PROJECT #: 20101
CHECKED BY: JDA
DRAWN BY: SJT
DATE: 02.23.2020

AGENCY APPROVAL

TELECOM EQUIPMENT RACK GROUNDING DETAIL

ET506

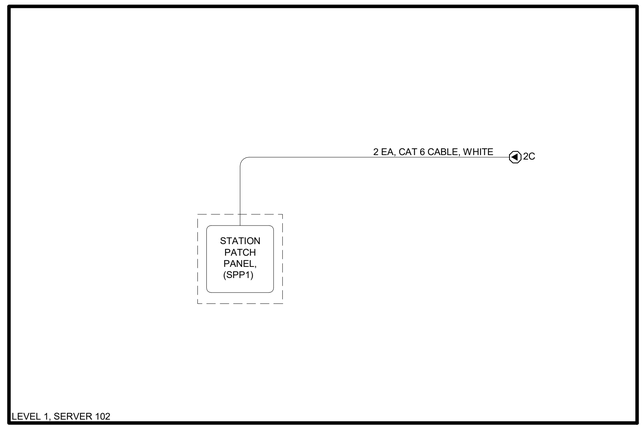

C3 TELECOM CABLE RISER DIAGRAM
NO SCALE

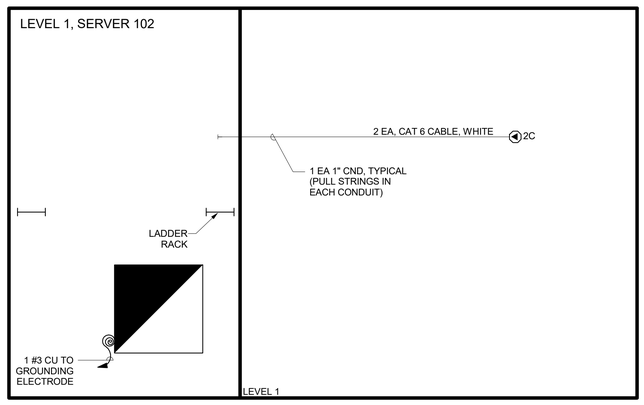

A3 TELECOM CONDUIT RISER DIAGRAM
NO SCALE

5/20/2021 3:45:42 PM

ARCH | NEXUS

Architectural NEXUS, Inc.
2505 East Parleys Way
Salt Lake City, UT 84109
T 801.924.5000
http://www.archnexus.com

Original drawings remain the property of the Architect and as such the Architect retains total ownership and control. The design represented by these drawings is sold to the client for a one time use, unless otherwise agreed upon in writing by the Architect. © Architectural Nexus, Inc. 2019

LICENSED PROFESSIONAL ENGINEER No. 8182456 TYLER COUIRE STATE OF UTAH
4/13/2021

UNIVERSITY OF UTAH
WILLIAMS BLDG TIER 3 NETWORK
NODE INTERFACE REMODEL

UNIVERSITY OF UTAH RESEARCH PARK,
CHIPETA WAY
SALT LAKE CITY, UT

#	Date	Revision

PERMIT SET

NEXUS PROJECT #: 20101
CHECKED BY: JDA
DRAWN BY: SJT
DATE: 02.23.2020

AGENCY APPROVAL

TELECOM RISER DIAGRAMS

ET601

FIRE ALARM LEGEND

SYMBOL	DESCRIPTION
AIR	AIR SAMPLING SYSTEM DETECTOR
	AIR SAMPLING PORT
U	AIR SAMPLING PORT, UNDER RAISED FLOOR
MM	MONITOR MODULE.
75	ALARM, HORN/STROBE, ONE ASSEMBLY. SUBSCRIPT INDICATES CANDELA RATING.
75	ALARM, HORN/STROBE, ONE ASSEMBLY, CEILING MOUNTED. SUBSCRIPT INDICATES CANDELA RATING.

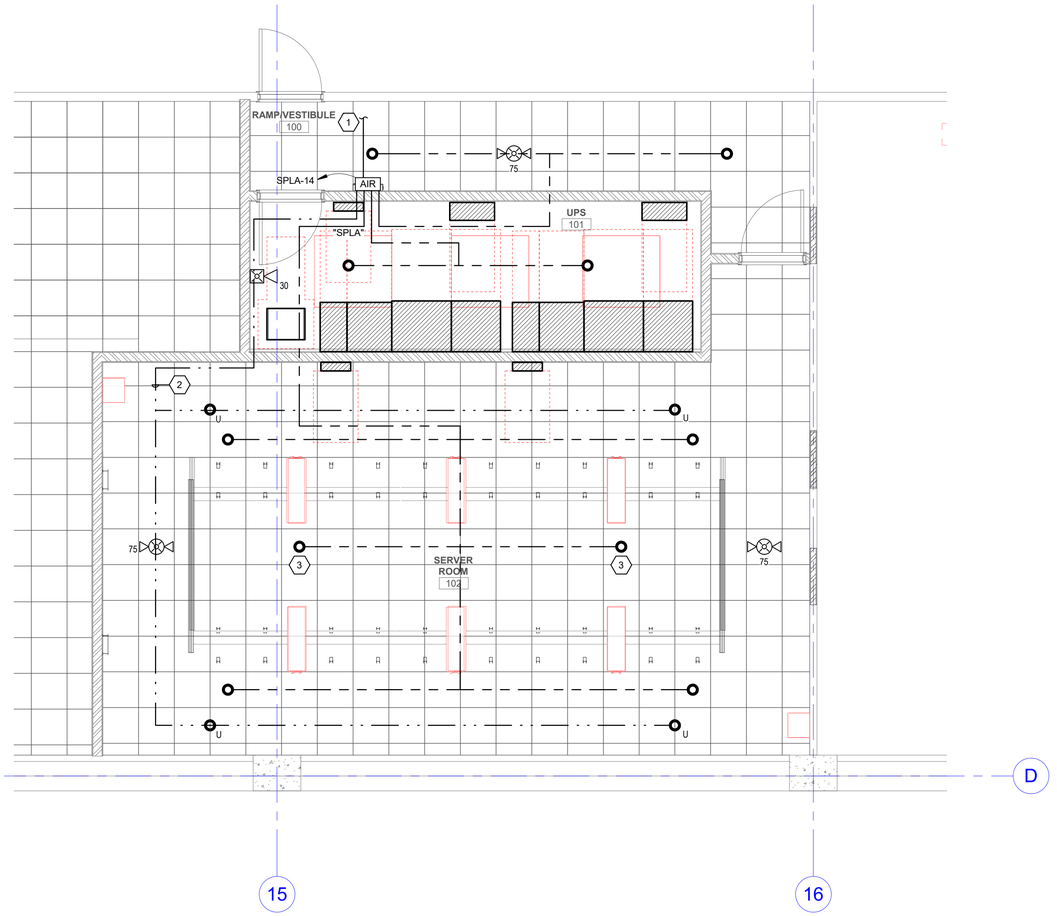

A4 LEVEL 1 FIRE ALARM PLAN
SCALE: 1/4" = 1'-0"

GENERAL SHEET NOTES

1 THE SCOPE OF WORK FOR THIS PROJECT INCLUDES THE INSTALLATION OF A NEW AIR SAMPLING DETECTION SYSTEM IN THE NEW DATA CENTER THAT WILL BE USED FOR RELEASING OF THE PRE-ACTION FIRE SPRINKLER SYSTEM INSTALLED BY THE FIRE SPRINKLER CONTRACTOR UNDER DIVISION 21. ADDITIONALLY, NEW BUILDING FIRE ALARM NOTIFICATION APPLIANCES SHALL BE INSTALLED IN THE REMODEL AREA. NEW DEVICES SHALL BE COMPATIBLE WITH EXISTING FIRE ALARM SYSTEM. CLOSE COORDINATION BETWEEN TRADES SHALL BE PERFORMED TO ENSURE PROPER OPERATION OF SYSTEMS AT COMPLETION OF THE PROJECT TO THE SATISFACTION OF THE OWNER.

2 CONTRACTOR SHALL PERFORM A SITE VISIT TO EXAMINE EXISTING CONDITIONS TO FULLY UNDERSTAND THE EXTENT OF WORK TO BE PERFORMED.

3 CONTRACTOR IS RESPONSIBLE FOR PATCHING AND PAINTING OF SURFACES TO MATCH ADJACENT DUE TO DEMOLITION IF NOT INCLUDED BY GENERAL CONTRACTOR AS PART OF THEIR WORK.

4 THESE DOCUMENTS ARE FOR SUBMITTAL REVIEW AND COORDINATION AND MAY BE USED BY THE CONTRACTOR AS A DESIGN BASIS FOR INSTALLATION DRAWINGS. THE FIRE ALARM CONTRACTOR SHALL PROVIDE INSTALLATION DRAWINGS FOR REVIEW AND APPROVAL PRIOR TO INSTALLATION.

5 CONTRACTOR IS RESPONSIBLE FOR FINAL INSTALLATION DESIGN, INCLUDING BATTERY CALCULATIONS AND VOLTAGE DROP CALCULATIONS. DESIGNER SHALL BE A MINIMUM NICET LEVEL III TECHNICIAN OR LICENSED FIRE PROTECTION ENGINEER AND SHALL OVERSEE THE INSTALLATION OF EQUIPMENT. MAJOR CONFLICTS SHALL BE BROUGHT TO THE ATTENTION OF THE GENERAL CONTRACTOR, ARCHITECT, AND ENGINEER OF RECORD FOR RESOLUTION.

6 THE FIRE ALARM CONTRACTOR SHALL COORDINATE WITH THE FIRE SPRINKLER CONTRACTOR AND OTHER TRADES FOR PROVISION OF CONNECTIONS BETWEEN THEIR RESPECTIVE SYSTEMS.

7 MONITORING OF THE PRE-ACTION SYSTEM SHALL BE PROVIDED BY THE FIRE ALARM CONTRACTOR THROUGH THE MODIFICATION OF EXISTING SLC'S AND INSTALLATION OF MONITORING MODULES. AIR SAMPLING SYSTEM SHALL BE MONITORED BY THE RELEASING PANEL.

8 PROVIDE ACCESS DOORS AND SIGNAGE WHERE ACCESS IS REQUIRED TO CONCEALED FIRE ALARM EQUIPMENT. LOCATIONS TO BE APPROVED BY ARCHITECT.

9 DESIGN, FABRICATION, INSTALLATION, AND TESTING SHALL BE IN ACCORDANCE WITH:
- A. IBC, 2018
- B. NFPA 70, CURRENTLY ADOPTED VERSION
- C. NFPA 72, CURRENTLY ADOPTED VERSION
- D. UNIVERSITY OF UTAH GUIDELINES

10 COORDINATE TESTING WITH OTHER TRADES AND U OF U PERSONNEL PRIOR TO ACTION.

11 FLOW AND TAMPER CONFIGURATION BASED UPON FIRE SPRINKLER DESIGN CONCEPT. FIELD VERIFY ACTUAL REQUIREMENTS. INCLUDE ANY ADDITIONAL MONITOR MODULES REQUIRED BY ACTUAL DESIGN REQUIREMENTS.

12 PROVIDE SYNCHRONIZED STROBES THROUGHOUT FACILITY. PROVIDE SYNCHRONIZATION MODULES PER MANUFACTURER'S REQUIREMENTS. INCLUDE ADDITIONAL WIRING, IF REQUIRED.

SHEET KEYNOTES

1 CONNECT AIR SAMPLING CIRCUITS TO PRE-ACTION RELEASING PANEL PROVIDED BY DIVISION 21.

2 PROVIDE ONE VESDA ZONE UNDER RAISED FLOOR.

3 VESDA PORTS INSIDE SERVER CONTAINMENT AREA ARE FOR FUTURE. PROVIDE PORTS AND TUBING FOR FUTURE INSTALLATION.

ARCH | NEXUS

Architectural NEXUS, Inc.
2505 East Parleys Way
Salt Lake City, UT 84109
T 801.924.5000
http://www.archnexus.com

Original drawings remain the property of the Architect and as such the Architect retains total ownership and control. The design represented by these drawings is sold to the client for a one time use, unless otherwise agreed upon in writing by the Architect. © Architectural Nexus, Inc. 2019

LICENSED PROFESSIONAL ENGINEER
No. 8182456
TYLER J. SQUIRE
STATE OF UTAH
4/13/2021

UNIVERSITY OF UTAH
WILLIAMS BLDG TIER 3 NETWORK NODE INTERFACE REMODEL
UNIVERSITY OF UTAH RESEARCH PARK, CHIPETA WAY
SALT LAKE CITY, UT

#	Date	Revision

PERMIT SET

NEXUS PROJECT #: 20101
CHECKED BY: JDD
DRAWN BY: EJB
DATE: 02.23.2020

AGENCY APPROVAL

LEVEL 1 FIRE ALARM PLAN

FA101

5/20/2021 3:45:46 PM

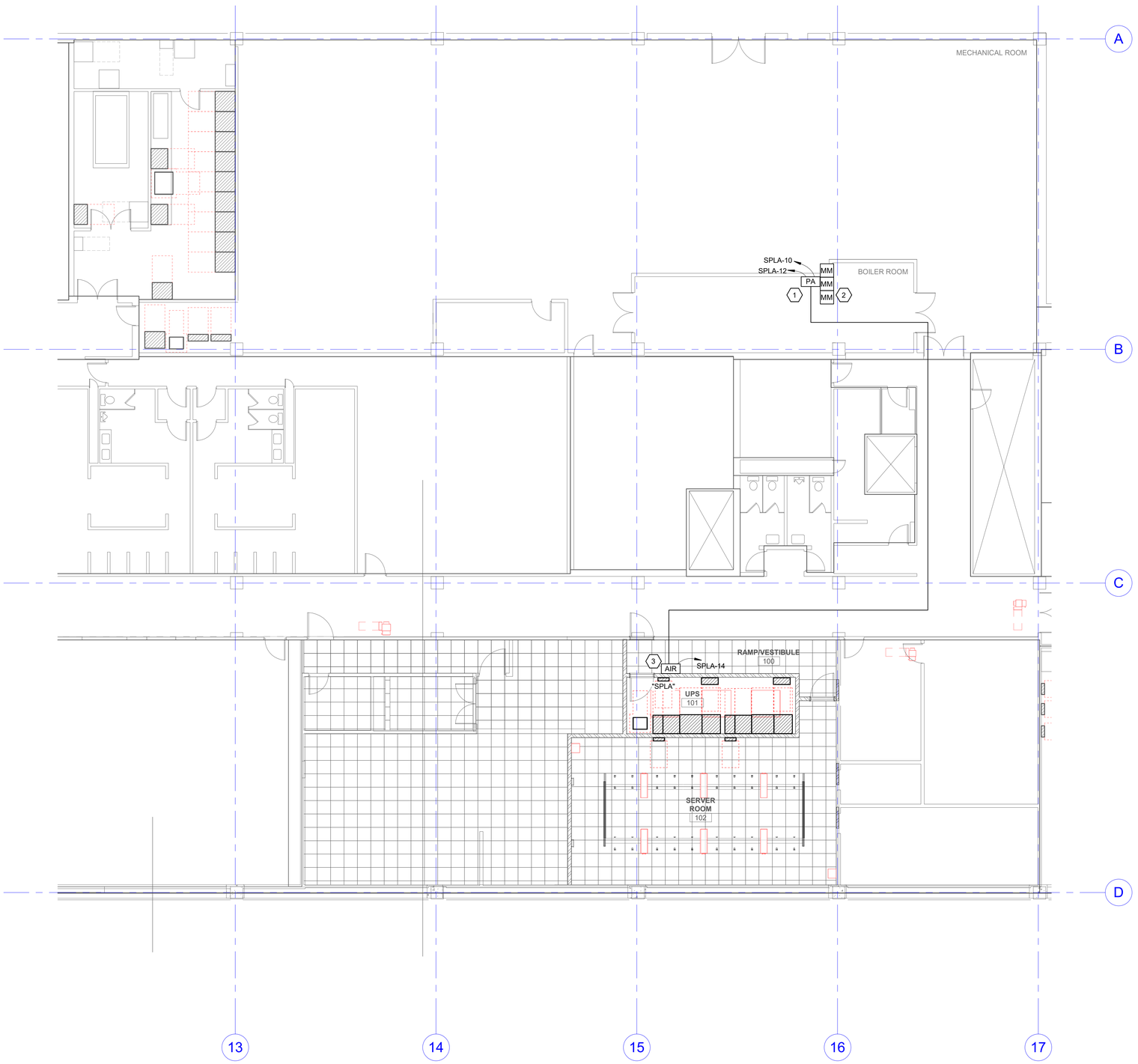

A5 LEVEL 1 ENLARGED AREA FIRE ALARM PLAN
SCALE: 1/8" = 1'-0"

5/20/2021 3:45:49 PM

GENERAL SHEET NOTES

1 THE SCOPE OF WORK FOR THIS PROJECT INCLUDES THE INSTALLATION OF A NEW AIR SAMPLING DETECTION SYSTEM IN THE NEW DATA CENTER THAT WILL BE USED FOR RELEASING OF THE PRE-ACTION FIRE SPRINKLER SYSTEM INSTALLED BY THE FIRE SPRINKLER CONTRACTOR UNDER DIVISION 21. ADDITIONALLY, NEW BUILDING FIRE ALARM NOTIFICATION APPLIANCES SHALL BE INSTALLED IN THE REMODEL AREA. NEW DEVICES SHALL BE COMPATIBLE WITH EXISTING FIRE ALARM SYSTEM. CLOSE COORDINATION BETWEEN TRADES SHALL BE PERFORMED TO ENSURE PROPER OPERATION OF SYSTEMS AT COMPLETION OF THE PROJECT TO THE SATISFACTION OF THE OWNER.

2 CONTRACTOR SHALL PERFORM A SITE VISIT TO EXAMINE EXISTING CONDITIONS TO FULLY UNDERSTAND THE EXTENT OF WORK TO BE PERFORMED.

3 CONTRACTOR IS RESPONSIBLE FOR PATCHING AND PAINTING OF SURFACES TO MATCH ADJACENT DUE TO DEMOLITION IF NOT INCLUDED BY GENERAL CONTRACTOR AS PART OF THEIR WORK.

4 THESE DOCUMENTS ARE FOR SUBMITTAL REVIEW AND COORDINATION AND MAY BE USED BY THE CONTRACTOR AS A DESIGN BASIS FOR INSTALLATION DRAWINGS. THE FIRE ALARM CONTRACTOR SHALL PROVIDE INSTALLATION DRAWINGS FOR REVIEW AND APPROVAL PRIOR TO INSTALLATION.

5 CONTRACTOR IS RESPONSIBLE FOR FINAL INSTALLATION DESIGN, INCLUDING BATTERY CALCULATIONS AND VOLTAGE DROP CALCULATIONS. DESIGNER SHALL BE A MINIMUM NICET LEVEL III TECHNICIAN OR LICENSED FIRE PROTECTION ENGINEER AND SHALL OVERSEE THE INSTALLATION OF EQUIPMENT. MAJOR CONFLICTS SHALL BE BROUGHT TO THE ATTENTION OF THE GENERAL CONTRACTOR, ARCHITECT, AND ENGINEER OF RECORD FOR RESOLUTION.

6 THE FIRE ALARM CONTRACTOR SHALL COORDINATE WITH THE FIRE SPRINKLER CONTRACTOR AND OTHER TRADES FOR PROVISION OF CONNECTIONS BETWEEN THEIR RESPECTIVE SYSTEMS.

7 MONITORING OF THE PRE-ACTION SYSTEM SHALL BE PROVIDED BY THE FIRE ALARM CONTRACTOR THROUGH THE MODIFICATION OF EXISTING SLC'S AND INSTALLATION OF MONITORING MODULES. AIR SAMPLING SYSTEM SHALL BE MONITORED BY THE RELEASING PANEL.

8 PROVIDE ACCESS DOORS AND SIGNAGE WHERE ACCESS IS REQUIRED TO CONCEALED FIRE ALARM EQUIPMENT. LOCATIONS TO BE APPROVED BY ARCHITECT.

9 DESIGN, FABRICATION, INSTALLATION, AND TESTING SHALL BE IN ACCORDANCE WITH:
- A. IBC, 2018
- B. NFPA 70, CURRENTLY ADOPTED VERSION
- C. NFPA 72, CURRENTLY ADOPTED VERSION
- D. UNIVERSITY OF UTAH GUIDELINES

10 COORDINATE TESTING WITH OTHER TRADES AND U OF U PERSONNEL PRIOR TO ACTION.

11 FLOW AND TAMPER CONFIGURATION BASED UPON FIRE SPRINKLER DESIGN CONCEPT. FIELD VERIFY ACTUAL REQUIREMENTS. INCLUDE ANY ADDITIONAL MONITOR MODULES REQUIRED BY ACTUAL DESIGN REQUIREMENTS.

12 PROVIDE SYNCHRONIZED STROBES THROUGHOUT FACILITY. PROVIDE SYNCHRONIZATION MODULES PER MANUFACTURER'S REQUIREMENTS. INCLUDE ADDITIONAL WIRING, IF REQUIRED.

SHEET KEYNOTES

1 PRE-ACTION CABINET PROVIDED BY DIVISION 21.

2 PROVIDE MONITOR MODULES TO MONITOR PRE-ACTION RELEASING PANEL PROVIDED BY DIVISION 21.

3 AIR SAMPLING PANEL. CONNECT TO PRE-ACTION RELEASING PANEL. COORDINATE WITH DIVISION 21 FOR INTERCONNECTION AND PROGRAMMING.

ARCH | NEXUS
Architectural NEXUS, Inc.
2505 East Parleys Way
Salt Lake City, UT 84109
T 801.924.5000
http://www.archnexus.com

Original drawings remain the property of the Architect and as such the Architect retains total ownership and control. The design represented by these drawings is sold to the client for a one time use, unless otherwise agreed upon in writing by the Architect. © Architectural Nexus, Inc. 2019

LICENSED PROFESSIONAL ENGINEER
No. 8182456
TYLER MCGUIRE
STATE OF UTAH
4/13/2021

UNIVERSITY OF UTAH
WILLIAMS BLDG TIER 3 NETWORK NODE INTERFACE REMODEL
UNIVERSITY OF UTAH RESEARCH PARK, CHIPETA WAY
SALT LAKE CITY, UT

#	Date	Revision

PERMIT SET

NEXUS PROJECT #: 20101
CHECKED BY: JDD
DRAWN BY: EJB
DATE: 02.23.2020

AGENCY APPROVAL

ENLARGED AREA FIRE ALARM PLAN

FA401

PRE-ACTION INPUT/OUTPUT MATRIX

			OUTPUT DEVICES					
		ZONE	GENERAL ALARM	SUPERVISORY SIGNAL	TROUBLE SIGNAL	PRE-ACTION RELEASE		NOTES
INITIATING DEVICES	1	VESDA - FAULT			●			
	2	VESDA - ACTION		●				
	3	VESDA - ALERT		●				
	4	VESDA - FIRE 1	●					
	5	VESDA - FIRE 2	●					
	6	MANUAL PULL	●			●		
	7	VESDA FIRE & PRESSURE FLOW				●		
	8	LOW AIR		●				
	9	PRESSURE FLOW	●			●		
	10	TAMPER			●			
	11	PANEL TROUBLE			●			
	12	LOW BATERY			●			
	13	AC POWER LOSS			●			

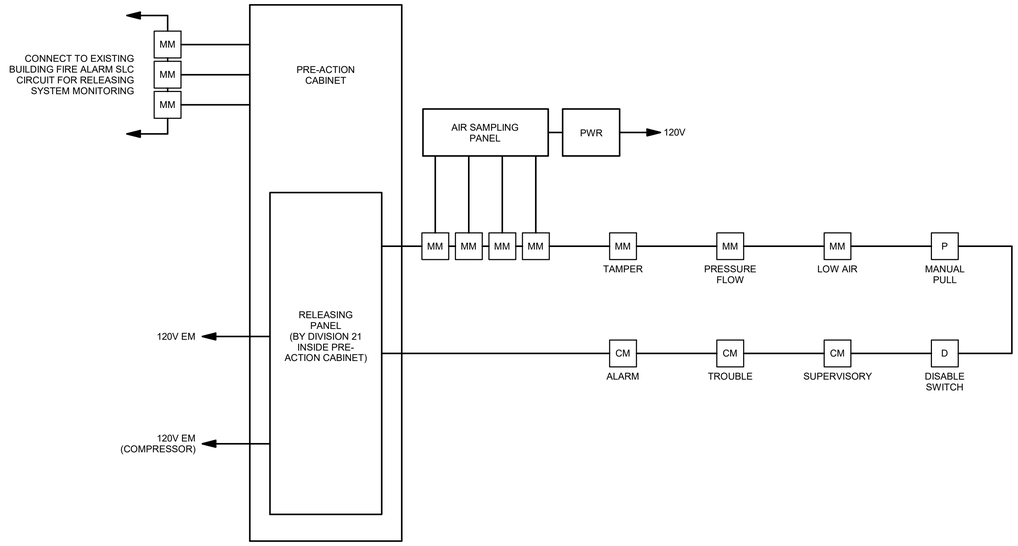

A3 PRE-ACTION ALARM RISER
SCALE: 3/16" = 1'-0"

ARCH | NEXUS

Architectural NEXUS, Inc.
2505 East Parleys Way
Salt Lake City, UT 84109
T 801.924.5000
http://www.archnexus.com

Original drawings remain the property of the Architect and as such the Architect retains total ownership and control. The design represented by these drawings is sold to the client for a one time use, unless otherwise agreed upon in writing by the Architect.
© Architectural Nexus, Inc. 2019

LICENSED PROFESSIONAL ENGINEER
No. 8182456
TYLER J. SQUIRE
STATE OF UTAH
4/13/2021

UNIVERSITY OF UTAH
WILLIAMS BLDG TIER 3 NETWORK NODE INTERFACE REMODEL
UNIVERSITY OF UTAH RESEARCH PARK, CHIPETA WAY
SALT LAKE CITY, UT

#	Date	Revision

PERMIT SET

NEXUS PROJECT #: 20101
CHECKED BY: JDD
DRAWN BY: EJB
DATE: 02.23.2020

AGENCY APPROVAL

FIRE ALARM RISER

FA601

5/20/2021 3:45:50 PM

SYMBOL LEGEND

SYMBOL	DESCRIPTION
VALVES, METERS, AND GAUGES	
	SHUT OFF VALVE
	GATE VALVE
	CHECK VALVE
	AUTO 2-WAY VALVE
	AUTO 3-WAY VALVE
	GLOBE VALVE
	BALL VALVE
	RELIEF VALVE
	CHAIN OPERATED GATE VALVE
	PRESSURE REDUCING VALVE
	BUTTERFLY VALVE
	SOLENOID VALVE
	ANGLE VALVE
	VENTURI
	BALANCING OR PLUG COCK
	FLOW SETTER
	EXPANSION VALVE (REFRIG.)
	GAS COCK
MAV	MANUAL AIR VENT
	STRAINER
	GAUGE COCK
	FLEXIBLE CONNECTION
	PRESSURE GAUGE
	THERMOMETER
	VICTUALIC COUPLING
	REDUCER CONCENTRIC
	REDUCER ECCENTRIC
	REFRIGERANT SITE GLASS
	REFRIGERANT STRAINER
	REFRIGERANT FILTER DRIER
	90 DEG ELBOW UP
	90 DEG ELBOW DOWN
	90 DEG TEE UP
	90 DEG TEE DOWN
	UNION
	CAPPED PIPE
	ANCHOR
	FLOAT AND THERMOSTATIC TRAP
HVAC SYMBOLS	
T	THERMOSTAT
S	TEMPERATURE SENSOR
H	HUMIDISTAT

SYMBOL LEGEND

SYMBOL	DESCRIPTION
DUCT WORK	

SINGLE LINE	DOUBLE LINE	DESCRIPTION
		RECTANGULAR SUPPLY DUCT UP
		RECTANGULAR SUPPLY DUCT DOWN
		RECTANGULAR RETURN DUCT UP
		RECTANGULAR RETURN DUCT DOWN
		RECTANGULAR EXHAUST DUCT UP
		RECTANGULAR EXHAUST DUCT DOWN
		ROUND DUCT UP
		ROUND DUCT DOWN
		ACCOUSTICALLY LINED RECTANGULAR DUCT
		90° RECTANGULAR ELBOW WITH TURNING VANES
		90° RADIUS ELBOW R=1.5
		DUCT SIZE OR SHAPE TRANSITION
		OPPOSED BLADE BALANCING DAMPER (O.B.D.) IN RECT DUCT
		BUTTERFLY BALANCING DAMPER IN ROUND DUCTS
		COMBINATION TEE
		SPLITTER DAMPER
		SQUARE OR RECTANGULAR CEILING DIFFUSER
		ROUND CEILING DIFFUSER
		SIDEWALL REGISTER SUPPLY OR RETURN
		ROUND FLEXIBLE DUCT
		RETURN GRILLE
		EXHAUST GRILLE
		FIRE SMOKE DAMPER
		FIRE DAMPER
SD	SD	SMOKE DAMPER
FC	FC	FLEXIBLE CONNECTION
		FLEXIBLE CONNECTION

PIPING LEGEND

NOTE: ALL ABBREVIATIONS MAY NOT BE USED.

HPS	**HIGH PRESSURE STEAM**
MPS	**MEDIUM PRESSURE STEAM**
LPS	**LOW PRESSURE STEAM**
HPC	**HIGH PRESSURE CONDENSATE RETURN**
MPC	**MEDIUM PRESSURE CONDENSATE RETURN**
LPC	**LOW PRESSURE CONDENSATE RETURN**
PC	**PUMP DISCHARGE**
TWS	**TEMPERED WATER SUPPLY**
CHWS	**CHILLED WATER SUPPLY**
CHWR	**CHILLED WATER RETURN**
HHWS	**HEATING HOT WATER SUPPLY**
HHWR	**HEATING HOT WATER RETURN**
RL	**REFRIGERANT LIQUID**
RS	**REFRIGERANT SUPPLY**
CWS	**CONDENSER WATER SUPPLY**
CWR	**CONDENSER WATER RETURN**
D	**DRAIN LINE**
HG	**HOT GAS BYPASS**
GS	**GLYCOL SUPPLY**
GR	**GLYCOL RETURN**
FOS	**FUEL OIL SUPPLY**
FOV	**FUEL OIL VENT**

DEFINITIONS

NOTE: ALL DEFINITIONS MAY NOT BE USED.

INDICATED: THE TERM "INDICATED" REFERS TO GRAPHIC REPRESENTATIONS, NOTES, OR SCHEDULES ON THE DRAWINGS, OTHER PARAGRAPHS OR SCHEDULES IN THE SPECIFICATIONS, AND SIMILAR REQUIREMENTS IN THE CONTRACT DOCUMENTS. WHERE TERMS SUCH AS "SHOWN", "NOTED", "SCHEDULED", AND "SPECIFIED" ARE USED, IT IS TO HELP THE READER LOCATE THE REFERENCE, NO LIMITATION ON LOCATION IS INTENDED.

DIRECTED: TERMS SUCH AS "DIRECTED", "REQUESTED", AUTHORIZED", "SELECTED", "APPROVED", "REQUIRED", AND "PERMITTED" MEAN "DIRECTED BY THE ENGINEER", "REQUESTED BY THE ENGINEER", AND SIMILAR PHRASES.

APPROVED: THE TERM "APPROVED", WHERE USED IN CONJUNCTION WITH THE ENGINEER'S ACTION ON THE CONTRACTOR'S SUBMITTALS, APPLICATIONS, AND REQUESTS, IS LIMITED TO THE ENGINEER'S DUTIES AND RESPONSIBILITIES AS STATED IN GENERAL AND SUPPLEMENTARY CONDITIONS.

FURNISH: THE TERM "FURNISH" IS USED TO MEAN "SUPPLY AND DELIVER TO THE PROJECT SITE, READY FOR UNLOADING, UNPACKING, ASSEMBLY, INSTALLATION, AND SIMILAR OPERATIONS."

INSTALL: THE TERM "INSTALL" IS USED TO DESCRIBE OPERATIONS AT PROJECT SITE INCLUDING THE ACTUAL "UNLOADING, UNPACKING, ASSEMBLY, ERECTION, PLACING, ANCHORING, APPLYING, WORKING TO DIMENSION, FINISHING, CURING, PROTECTING, CLEANING, AND SIMILAR OPERATIONS."

PROVIDE: THE TERM "PROVIDE" MEANS "TO FURNISH AND INSTALL, COMPLETE AND READY FOR THE INTENDED USE."

INSTALLER: AN "INSTALLER" IS THE CONTRACTOR OR AN ENTITY ENGAGED BY THE CONTRACTOR, EITHER AS AN EMPLOYEE, SUBCONTRACTOR, OR SUB-SUBCONTRACTOR, FOR PERFORMANCE OF A PARTICULAR CONSTRUCTION ACTIVITY, INCLUDING INSTALLATION, ERECTION, APPLICATION, AND SIMILAR OPERATIONS. INSTALLERS ARE REQUIRED TO BE EXPERIENCED IN THE OPERATIONS THEY ARE ENGAGED TO PERFORM.

SYMBOL LEGEND

SYMBOL	DESCRIPTION
REFERENCE LINES AND SYMBOLS	
# / SHEET	DETAIL INDICATOR: # INDICATES DETAIL NUMBER, SHEET INDICATES DRAWING SHEET WHERE DETAIL IS SHOWN.
# / SHEET	ELEVATION OR SECTION INDICATOR, EXTERIOR: # INDICATES ELEVATION OR SECTION NUMBER, SHEET INDICATES DRAWING SHEET WHERE ELEVATION OR SECTION IS SHOWN.
# / SHEET	ELEVATION OR SECTION INDICATOR, INTERIOR: # INDICATES ELEVATION OR SECTION NUMBER, SHEET INDICATES DRAWING SHEET WHERE ELEVATION OR SECTION IS SHOWN.
100	SPACE NUMBER
1	KEYNOTE INDICATOR
	REVISION INDICATOR
	EQUIPMENT INDICATOR
	PLUMBING FIXTURE INDICATOR
TYPE / CFM / SIZE	DIFFUSER/GRILLE INDICATOR
TYPE / SIZE	DIFFUSER/GRILLE INDICATOR
	BREAK, STRAIGHT
	BREAK, ROUND
MATCH LINE / SEE XX/X-XXX	MATCHLINE INDICATOR
	HIDDEN FEATURES LINE: HIDDEN, THIN LINE
	CONTRACT LIMIT LINE: DASHDOT, WIDE LINE
	NEW CONNECTION TO EXISTING
	POINT OF DEMOLITION

ABBREVIATIONS

NOTE: ALL ABBREVIATIONS MAY NOT BE USED.

(E)	EXISTING
(F)	FUTURE
AD	ACCESS DOOR
AIR COND	AIR CONDITION(-ING,-ED)
APD	AIR PRESSURE DROP
BD	BALANCING DAMPER
BHP	BRAKE HORSE POWER
BTU	BRITISH THERMAL UNIT
BTUH	BTU/HOUR
CFH	CUBIC FEET PER HOUR
CFM	CUBIC FEET PER MINUTE
COND	CONDENS(-ER, -ING, -ATION)
CV	CONTROL VALVE
DB	DRY BULB TEMPERATURE
DCW	DOMESTIC COLD WATER
DHW	DOMESTIC HOT WATER
DHWR	DOMESTIC HOT WATER RECIRC
DP	DEPTH OR DEEP
EA	EXHAUST AIR
EER	ENERGY EFFICIENCY RATIO
EFF	EFFICIENCY
ELEC	ELECTRIC
ELEV	ELEVATION
ENT	ENTERING
EVAP	EVAPORAT(-E, -ING, -ED, -OR)
EWT	ENTERING WATER TEMPERATURE
EXT	EXTERNAL
FC	FLEXIBLE CONNECT(-OR, -ION)
FD	FIRE DAMPER
FLA	FULL LOAD AMPS
FPI	FINS PER INCH
FPM	FEET PER MINUTE
FPS	FEET PER SECOND
FSD	FIRE SMOKE DAMPER
GE	GREASE EXHAUST
GPH	GALLONS PER HOUR
GPM	GALLONS PER MINUTE
HD	HEAD
HG	MERCURY
HP	HORSEPOWER
HR	HOUR
HT	HEIGHT
HTG	HEATING
HZ	HERTZ (FREQUENCY)
ID	INSIDE DIAMETER
IN	INCH
KW	KILOWATT
LAT	LEAVING AIR TEMPERATURE
LBS	POUNDS
LG	LENGTH
LH	LATENT HEAT
LRA	LOCKED ROTOR AMPS
LVG	LEAVING
LWT	LEAVING WATER TEMPERATURE
MBH	THOUSAND BTU PER HOUR
MCA	MINIMUM CIRCUIT AMPS
MFR	MANUFACTUR(-ER, -ED)
NC	NORMALLY CLOSED
NC	NOISE CRITERIA
NIC	NOT IN CONTRACT
NO	NORMALLY OPEN
NPSH	NET POSITIVE SUCTION HEAD
NTS	NOT TO SCALE
OA	OUTSIDE AIR
OD	OUTSIDE DIAMETER
OZ	OUNCE
PD	PRESSURE DROP OR DIFFERENCE
PG	PROPOLENE GLYCOL
PH	PHASE
PPM	PARTS PER MILLION
PRESS	PRESSURE
PSF	POUNDS PER SQUARE FOOT
PSI	POUNDS PER SQUARE INCH
PSIA	PSI ABSOLUTE
PSIG	PSI GAUGE
R	THERMAL RESISTANCE
RA	RETURN AIR
RECIRC	RECIRCULATE
REFR	REFRIGERATION
REQD	REQUIRED
RLA	RATED LOAD AMPS
RPM	REVOLUTIONS PER MINUTE
SA	SUPPLY AIR
SC	SHADING COEFFICIENT
SCFM	STANDARD CUBIC FEET PER MINUTE
SCW	SOFT COLD WATER
SF	SAFETY FACTOR
SH	SENSIBLE HEAT
SL	SEA LEVEL
SP	STATIC PRESSURE
SPEC(S)	SPECIFICATION(S)
SQ	SQUARE
STD	STANDARD
SW	SOIL, WASTE
TA(R)	TRANSFER AIR (RETURN)
TA(S)	TRANSFER AIR (SUPPLY)
TD	TEMP. DROP OR DIFF.
TEMP	TEMPERATURE
THERM	THERMAL
TOT	TOTAL
TSTAT	THERMOSTAT
V	VOLT
V	VENT
VAC	VACUUM
VAV	VARIABLE AIR VOLUME
VEL	VELOCITY TEMPERATURE
VEL	VELOCITY
VENT	VENT, VENTILATION
VERT	VERTICAL
VFD	VARIABLE FREQUENCY DRIVE
VOL	VOLUME
WB	WET BULB TEMP
WC	WATER COLUMN
WG	WATER GAUGE
WPD	WATER PRESSURE DROP
WT	WEIGHT
WTR	WATER

MECHANICAL GENERAL NOTES

1 THE MECHANICAL DRAWINGS SHOW THE GENERAL DESIGN, ARRANGEMENT & EXTENT OF THE MECHANICAL SYSTEM. BECAUSE OF THE SMALL SCALE OF THE DRAWINGS, THESE DRAWINGS DO NOT SHOW ALL OFFSETS, BENDS OR ELBOWS NECESSARY FOR THE COMPLETE INSTALLATION IN THE SPACE PROVIDED. CONTRACTOR SHALL MAKE SUCH SLIGHT ALTERATIONS AS MAY BE NECESSARY TO MAKE THE SYSTEM COMPLETE & OPERATIONAL IN ACCORDANCE WITH THE DESIGN INTENT.

2 MAJOR DEVIATIONS SUCH AS CHANGES IN COMPONENT SIZES, WEIGHTS, QUANTITIES OR MATERIAL REQUIRE PRIOR APPROVAL BY THE DESIGN ENGINEER.

3 THE DRAWINGS & SPECIFICATIONS HAVE BEEN PREPARED TO SUPPLEMENT EACH OTHER & SHALL BE INTERPRETED AS AN INTEGRAL UNIT WITH THE ITEMS SHOWN ON ONE & NOT THE OTHER BEING FURNISHED & INSTALLED AS THOUGH SHOWN & CALLED OUT IN BOTH.

4 THE ENTIRE MECHANICAL INSTALLATION SHALL CONFORM TO THE REQUIREMENTS OF THE MOST RECENTLY ADOPTED BUILDING CODES, MECHANICAL CODE, PLUMBING CODE, ELECTRICAL CODE, & ALL OTHER APPLICABLE CITY, COUNTY, STATE, & FEDERAL CODES & REGULATIONS IN EFFECT.

5 THE ENTIRE MECHANICAL INSTALLATION SHALL CONFORM TO ANY CODES, RULES, REGULATIONS & REQUIREMENTS OF THE BUILDING OWNER.

6 PRIOR TO FABRICATION & INSTALLATION OF ANY MECHANICAL COMPONENT THE CONTRACTOR SHALL COORDINATE THE INSTALLATION OF ALL MECHANICAL WORK WITH ALL OTHER BUILDING TRADES, INCLUDING BUILDING TRADES HIRED DIRECTLY BY THE OWNER. WHERE CONFLICTS MAY OCCUR, THEY SHALL BE RESOLVED PRIOR TO INSTALLATION.

7 THE SPACE ABOVE ALL CEILINGS IS LIMITED. CAREFUL COORDINATION IS REQUIRED WITH ALL TRADES BEFORE ANY PIPE, DUCT, OR EQUIPMENT IS ORDERED & OR INSTALLED. ANY CONFLICTS &/OR CHANGES FOUND DURING INSTALLATION THAT RESULTS FROM THE LACK OF COORDINATION BY THE CONTRACTORS DURING THE SHOP DRAWING PROCESS ARE THE RESPONSIBILITY OF THE CONTRACTOR.

8 ALL MECHANICAL INFORMATION IS NOT SHOWN ON THE MECHANICAL DRAWINGS. THE CONTRACTOR SHALL BE RESPONSIBLE FOR COORDINATING ALL INFORMATION ON ALL OTHER CONSTRUCTION DOCUMENT.

9 THE CONTRACTOR SHALL BE RESPONSIBLE TO REVIEW & USE, WHERE APPROPRIATE, ALL THE MECHANICAL DETAILS SHOWN ON THE DRAWINGS. DETAILS MAY OR MAY NOT BE CALLED OUT ON THE DRAWINGS WITH SYMBOLS OR KEYED NOTES. ANY CHANGES RESULTING FROM FAILURE TO INSTALL THE MECHANICAL SYSTEM WITHOUT USING THE INCLUDED DETAILS SHALL BE THE RESPONSIBILITY OF THE CONTRACTOR.

10 THE STRUCTURE SHOWN ON ALL DETAILS MAY OR MAY NOT PERTAIN TO A PORTION OR ANY PORTION OF THE BUILDING. COORDINATE ALL MOUNTING REQUIREMENTS WITH ARCHITECTURAL & STRUCTURAL DRAWINGS.

11 ANY PART OF THE MECHANICAL INSTALLATION THAT FAILS, IS UNFIT, OR BECOMES DAMAGED DURING CONSTRUCTION SHALL BE REPAIRED OR REPLACED BY THE CONTRACTOR AT NO ADDITIONAL COST TO THE OWNER.

12 SEE ARCHITECTURAL REFLECTED CEILING PLAN FOR EXACT LOCATION OF ALL CEILING DIFFUSERS & GRILLES.

13 CONTRACTOR SHALL OPERATE THE SYSTEM & DEMONSTRATE ALL ASPECTS OF THE SYSTEM TO THE ENGINEER &/OR OWNER TO PROVE ALL SYSTEMS ARE OPERATIONAL.

14 DURING CONSTRUCTION, THE CONTRACTOR SHALL MAINTAIN A SET OF AS-BUILT REDLINED RECORD DRAINING AT THE PROJECT SITE. ALL CHANGES IN LAYOUT, ROUTING, EQUIPMENT, COMPONENTS, & ACCESSORIES SHALL BE RECORDED. THESE REDLINED DRAWINGS SHALL BE GIVEN TO THE ARCHITECT/ENGINEER AFTER THE FINAL INSPECTION IN ACCORDANCE WITH SPECIFICATIONS.

GENERAL EQUIPMENT NOTES

1 ALL CAPACITIES ARE AT JOB SITE CONDITIONS & ARE MINIMUM CAPACITY.

2 ALL MECHANICAL EQUIPMENT SHALL BE INSTALLED TO CONFORM WITH LOCAL SEISMIC REQUIREMENTS & THE REQUIREMENTS OF THESE CONSTRUCTION DOCUMENTS.

3 VERIFY ALL REQUIRED SERVICE CONNECTIONS, INCLUDING ELECTRICAL CHARACTERISTICS FOR ALL EQUIPMENT PRIOR TO ORDERING EQUIPMENT.

4 ALL EQUIPMENT SHALL BE INDEPENDENTLY SUPPORTED FROM STRUCTURAL MEMBERS.

5 ALL EQUIPMENT SHALL BE INSTALLED IN ACCORDANCE WITH MANUFACTURER'S WRITTEN INSTALLATION INSTRUCTIONS.

6 ALL SIMILAR EQUIPMENT SHALL BE OF THE SAME MANUFACTURER.

7 AIR INLETS & OUTLETS SHALL BE OF THE SAME MANUFACTURER.

8 THE CONTRACTOR SHALL BE RESPONSIBLE FOR THE HVAC EQUIPMENT CHECK-IN, SAFEKEEPING, & DAMAGE.

MECHANICAL SHEET INDEX

M001	MECHANICAL COVER SHEET
M101	DEMOLITON MECHANICAL PLAN
M201	MECHANICAL PLAN
M211	MECHANICAL ROOF PLAN
M501	MECHANICAL DETAILS
M601	MECHANICAL SCHEDULES

ARCH | NEXUS

Architectural NEXUS, Inc.
2505 East Parleys Way
Salt Lake City, UT 84109
T 801.924.5000
http://www.archnexus.com

Original drawings remain the property of the Architect and as such the Architect retains total ownership and control. The design represented by these drawings is sold to the client for a one time use, unless otherwise agreed upon in writing by the Architect. © Architectural Nexus, Inc. 2019

PROFESSIONAL ENGINEER
05-18-21
RYAN BOOGAARD
NO. 8677128
STATE OF UTAH

Exp: 03-31-23

UNIVERSITY OF UTAH
WILLIAMS BLDG TIER 3 NETWORK NODE INTERFACE REMODEL
UNIVERSITY OF UTAH RESEARCH PARK, CHIPETA WAY
SALT LAKE CITY, UT

#	Date	Revision

AGENCY APPROVAL

PERMIT SET

NEXUS PROJECT #: 20101
CHECKED BY: RHB
DRAWN BY: CLD
DATE: 04.13.2021

MECHANICAL COVER SHEET

M001

5/18/2021 5:08:59 PM

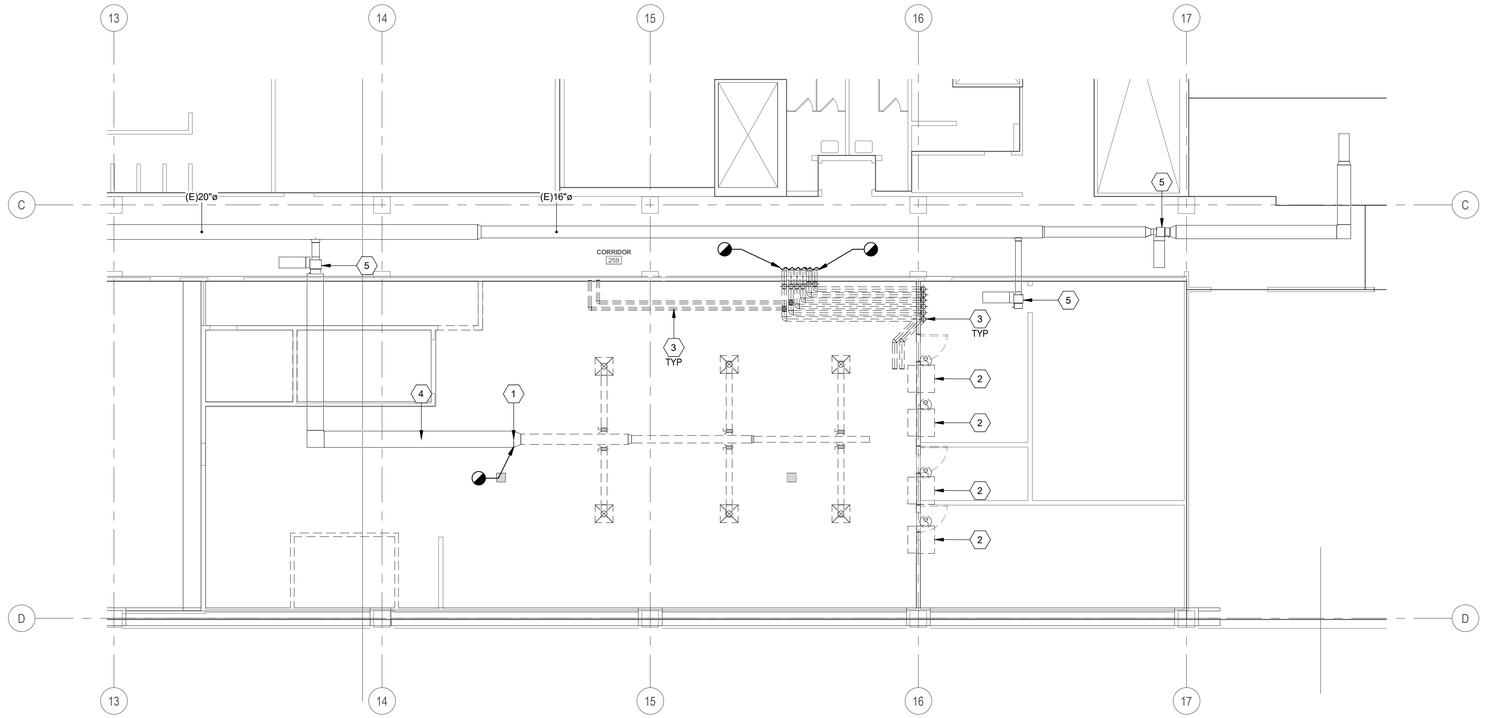

1 M101 **DEMOLITION MECHANICAL PLAN**
1/8" = 1'-0"

GENERAL SHEET NOTES

1. ALL EQUIPMENT TO BE SELECTED BASED OFF OF SITE INFORMATION, INCLUDING CURBS EQUAL TO OR GREATER THAN DESIGN SNOW DEPTH. ELEVATION: 4700' SDB: 95°F SWB: 63°F WDB: 5°F DESIGN SNOW DEPTH: 14"
2. THIS CONTRACTOR SHALL CLOSELY COORDINATE MECHANICAL AND PLUMBING WITH ELECTRICAL, ARCHITECTURAL, AND BUILDING STRUCTURE.
3. DISSIMILAR METAL PIPING CONNECTIONS SHALL HAVE DIELECTRIC ISOLATORS.
4. ALL DOMESTIC WATER PIPING TO BE PRESSURE TESTED, CLEANED, AND DISINFECTED PER SPECIFICATIONS.
5. PROVIDE ACCESS DOORS FOR ALL SERVICEABLE EQUIPMENT OR VALVES ABOVE HARD LID CEILINGS OR IN WALLS. ALL ACCESS PANELS ARE TO BE PAINTED TO MATCH ADJACENT SURFACES.
6. ALL MATERIALS WITHIN PLENUMS SHALL BE NONCOMBUSTIBLE OR SHALL BE LISTED AND LABELED AS HAVING A FLAME SPREAD INDEX OF NOT MORE THAN 25 AND A SMOKE-DEVELOPED INDEX OF NOT MORE THAN 50 WHEN TESTED IN ACCORDANCE WITH ASTM E 84 OR UL 723.
7. INSULATE ALL PLASTIC PIPING IN CEILING PLENUM. COMPLETELY ENCLOSE PLASTIC PIPE IN INSULATION THAT MEETS THE FLAME SPREAD INDEX OF NOT MORE THAN 25 AND A SMOKE-DEVELOPED INDEX OF NOT MORE THAN 50.
8. INSULATE ALL REFRIGERANT PIPING BY FULLY ENCLOSING PIPING IN INSULATION AND PROVIDING SEALED VAPOR BARRIER. ALL REFRIGERANT PIPING SHALL BE INSULATED WITH CLOSED-CELL ELASTOMER RUBBER INSULATION WITH A FLAME/SMOKE SPREAD INDEX BETTER THAN 25/50. ANY INSULATION EXPOSED TO OUTDOOR CONDITIONS OR SUNLIGHT SHALL BE UV RESISTANT. INSULATION IS SUBJECT TO INSPECTION BY COMMISSIONING AGENT AND/OR ENGINEER FOR COMPLIANCE.
9. WHERE PIPE OR DUCT PENETRATES A RATED ASSEMBLY OR FLOOR AND IS NOT REQUIRED TO BE PROTECTED BY A DAMPER, ALL SPACE BETWEEN THE DUCT AND ASSEMBLY IS TO BE FIRE CAULKED. INSULATION OR COVERINGS ARE NOT TO CONTINUE THROUGH ASSEMBLY UNLESS TESTED AS PART OF AN APPROVED PENETRATION FIRESTOP SYSTEM.
10. THIS PROJECT MAY REQUIRE AFTER HOURS AND WEEKEND WORK TO RUN PIPING/DUCTWORK OR MODIFY SYSTEMS IN OR AFFECTING OCCUPIED SPACES. COORDINATE ALL SHUTDOWNS 72 HOURS IN ADVANCE WITH OWNER.
11. CONTROLS TO MATCH EXISTING JOHNSON CONTROLS. TIE INTO EXISTING CONTROLS DDC SYSTEM AND UPDATED GRAPHICS. PROVIDE ENGINEER WITH 2 WEEKS OF TRENDS SHOWING PROPER OPERATION OF EQUIPMENT UPON COMPLETION OF PROJECT.
12. COORDINATE EXACT THERMOSTAT LOCATIONS WITH EQUIPMENT AND WITH OWNER. FAILURE TO DO SO MAY REQUIRE MOVING THERMOSTATS AT CONTRACTORS COST.
13. ALL CONTROLS WIRING SHALL BE INSTALLED IN RACEWAYS AND BE THE RESPONSIBILITY OF THE CONTROLS CONTRACTOR. RACEWAYS SHALL CONFORM TO THE FOLLOWING ELECTRICAL SPECIFICATIONS; HANGERS AND SUPPORTS FOR ELECTRICAL SYSTEMS, RACEWAYS AND BOXES FOR ELECTRICAL SYSTEMS AND SEISMIC CONTROLS FOR ELECTRICAL SYSTEMS.
14. CONTRACTOR SHALL FIELD VERIFY EXISTING FIELD CONDITIONS PRIOR TO ORDERING OR FABRICATING. ADDITIONAL COST WILL NOT BE ALLOWED FOR CONTRACTOR'S FAILURE TO BECOME FAMILIAR WITH EXISTING SITE CONDITIONS.
15. PROVIDE FACTORY AUTHORIZED STARTUP OF ALL EQUIPMENT INCLUDING STARTUP OF ANY FACTORY CONTROLS TO ENSURE PROPER SEQUENCING AND/OR COMMUNICATION TO BMS.
16. GENERAL CONTRACTOR SHALL HIRE A 3RD PARTY COMMISSIONING AGENT TO COMMISSION NEW HVAC EQUIPMENT. COMMISSIONING AGENT SHALL BE LICENSED MECHANICAL ENGINEER. COMMISSIONING AGENT TO PROVIDE COMMISSIONING PLAN LISTING EQUIPMENT AND TEST TO BE PERFORMED TO ENGINEER FOR REVIEW. COMMISSIONING AGENT SHALL PROVIDE REPORT STATING ANY SYSTEM DEFICIENCIES AND LISTING ANY DEFERRED TESTS.
17. PROVIDE OPERATION AND MAINTENANCE MANUALS (O&M) WITHIN 30 DAYS OF CERTIFICATE OF OCCUPANCY FOR ALL EQUIPMENT IN DIGITAL FORMAT TO ENGINEER FOR REVIEW. O&M'S SHALL INCLUDE DOCUMENTATION OF ALL WARRANTIES, REPORTS AND TESTS, RECORD DRAWINGS, CONTROLS SEQUENCE OF OPERATIONS WITH DIAGRAMS, & EQUIPMENT INFORMATION. EQUIPMENT INFORMATION INCLUDES MAKE & MODEL, WIRING, PIPING, STARTUP, SHUTDOWN, TROUBLE SHOOTING SYSTEM BALANCING REPORT, FINAL COMMISSIONING REPORT AND MAINTENANCE PROCEDURES.
18. PIPING AND DUCTWORK SHALL NOT BE SUPPORTED FROM THE ROOF DECK, JOIST BRIDGING OR OTHER PIPES. HANG PIPES FROM BEAMS, JOIST OR SUPPLEMENTARY STRUCTURAL MEMBERS. WHERE POSSIBLE INSTALL ALL PIPING AND DUCTWORK WITHIN 12" FROM SUPPORTING STRUCTURE.
19. WHERE JURISDICTION REQUIRES, CONTRACTOR IS RESPONSIBLE FOR PROVIDING SEISMIC RESTRAINT AND SUPPORT ENGINEERED BY A LICENSED STRUCTURAL ENGINEER. PROVIDE DESIGN DRAWINGS TO AUTHORITY HAVING JURISDICTION AND MECHANICAL ENGINEER FOR REVIEW.
20. MECHANICAL PIPING SCHEDULE:
    a. DOMESTIC WATER PIPING = TYPE L COPPER - SOLDERED
    b. REFRIGERANT PIPING = ACR TYPE L HARD-DRAWN COPPER - BRAZED
        - REFRIGERANT LINESET PIPING MATERIALS AND INSTALLATION TO BE DONE PER ASSOCIATED EQUIPMENT MANUFACTURER'S RECOMMENDATIONS.
    c. CONDENSATE DRAINAGE = DWV SOLID CORE PVC - SOLVENT CEMENT
        - CONDENSATE MATERIALS AND INSTALLATION TO BE DONE PER ASSOCIATED EQUIPMENT MANUFACTURER'S RECOMMENDATIONS.

SHEET KEYNOTES

1 REMOVE EXISTING DUCTWORK BACK TO THIS APPROXIMATE LOCATION AND CAP OFF.

2 REMOVE EXISTING TRANSFER FAN BELOW RAISED FLOOR IN THIS APPROXIMATE LOCATION. REMOVE ALL EXISTING ASSOCIATED COMPONENTS INCLUDING MOTORIZED DAMPERS AND ELECTRICAL CONNECTIONS AND WIRING.

3 REMOVE EXISTING CHILLED WATER PIPING AND CAP OFF ON CORRIDOR SIDE OF WALL.

4 EXISTING DUCTWORK IN THIS APPROXIMATE LOCATION TO REMAIN.

5 EXISTING MECHANICAL EQUIPMENT IN THIS APPROXIMATE LOCATION TO REMAIN.

AGENCY APPROVAL

ARCH | NEXUS

Architectural NEXUS, Inc.
2505 East Parleys Way
Salt Lake City, UT 84109
T 801.924.5000
http://www.archnexus.com

Original drawings remain the property of the Architect and as such the Architect retains total ownership and control. The design represented by these drawings is sold to the client for a one time use, unless otherwise agreed upon in writing by the Architect.
© Architectural Nexus, Inc. 2019

PROFESSIONAL ENGINEER
05-18-21
RYAN
BOOGAARD
NO. 8677128
STATE OF UTAH

Exp: 03-31-23

UNIVERSITY OF UTAH
WILLIAMS BLDG TIER 3 NETWORK NODE INTERFACE REMODEL
UNIVERSITY OF UTAH RESEARCH PARK, CHIPETA WAY
SALT LAKE CITY, UT

#	Date	Revision

PERMIT SET

NEXUS PROJECT #: 20101
CHECKED BY: RHB
DRAWN BY: CLD
DATE: 04.13.2021

DEMOLITON MECHANICAL PLAN

M101

5/18/2021 5:09:02 PM

GENERAL SHEET NOTES

1. ALL EQUIPMENT TO BE SELECTED BASED OFF OF SITE INFORMATION. INCLUDING CURBS EQUAL TO OR GREATER THAN DESIGN SNOW DEPTH. ELEVATION: 4700' SDB: 95°F SWB: 63°F WDB: 5°F DESIGN SNOW DEPTH: 14"
2. THIS CONTRACTOR SHALL CLOSELY COORDINATE MECHANICAL AND PLUMBING WITH ELECTRICAL, ARCHITECTURAL, AND BUILDING STRUCTURE.
3. DISSIMILAR METAL PIPING CONNECTIONS SHALL HAVE DIELECTRIC ISOLATORS.
4. ALL DOMESTIC WATER PIPING TO BE PRESSURE TESTED, CLEANED, AND DISINFECTED PER SPECIFICATIONS.
5. PROVIDE ACCESS DOORS FOR ALL SERVICEABLE EQUIPMENT OR VALVES ABOVE HARD LID CEILINGS OR IN WALLS. ALL ACCESS PANELS ARE TO BE PAINTED TO MATCH ADJACENT SURFACES.
6. ALL MATERIALS WITHIN PLENUMS SHALL BE NONCOMBUSTIBLE OR SHALL BE LISTED AND LABELED AS HAVING A FLAME SPREAD INDEX OF NOT MORE THAN 25 AND A SMOKE-DEVELOPED INDEX OF NOT MORE THAN 50 WHEN TESTED IN ACCORDANCE WITH ASTM E 84 OR UL 723.
7. INSULATE ALL PLASTIC PIPING IN CEILING PLENUM. COMPLETELY ENCLOSE PLASTIC PIPE IN INSULATION THAT MEETS THE FLAME SPREAD INDEX OF NOT MORE THAN 25 AND A SMOKE-DEVELOPED INDEX OF NOT MORE THAN 50.
8. INSULATE ALL REFRIGERANT PIPING BY FULLY ENCLOSING PIPING IN INSULATION AND PROVIDING SEALED VAPOR BARRIER. ALL REFRIGERANT PIPING SHALL BE INSULATED WITH CLOSED-CELL ELASTOMER RUBBER INSULATION WITH A FLAME/SMOKE SPREAD INDEX BETTER THAN 25/50. ANY INSULATION EXPOSED TO OUTDOOR CONDITIONS OR SUNLIGHT SHALL BE UV RESISTANT. INSULATION IS SUBJECT TO INSPECTION BY COMMISSIONING AGENT AND/OR ENGINEER FOR COMPLIANCE.
9. WHERE PIPE OR DUCT PENETRATES A RATED ASSEMBLY OR FLOOR AND IS NOT REQUIRED TO BE PROTECTED BY A DAMPER, ALL SPACE BETWEEN THE DUCT AND ASSEMBLY IS TO BE FIRE CAULKED. INSULATION OR COVERINGS ARE NOT TO CONTINUE THROUGH ASSEMBLY UNLESS TESTED AS PART OF AN APPROVED PENETRATION FIRESTOP SYSTEM.
10. THIS PROJECT MAY REQUIRE AFTER HOURS AND WEEKEND WORK TO RUN PIPING/DUCTWORK OR MODIFY SYSTEMS IN OR AFFECTING OCCUPIED SPACES. COORDINATE ALL SHUTDOWNS 72 HOURS IN ADVANCE WITH OWNER.
11. CONTROLS TO MATCH EXISTING JOHNSON CONTROLS. TIE INTO EXISTING CONTROLS DDC SYSTEM AND UPDATED GRAPHICS. PROVIDE ENGINEER WITH 2 WEEKS OF TRENDS SHOWING PROPER OPERATION OF EQUIPMENT UPON COMPLETION OF PROJECT.
12. COORDINATE EXACT THERMOSTAT LOCATIONS WITH EQUIPMENT AND WITH OWNER. FAILURE TO DO SO MAY REQUIRE MOVING THERMOSTATS AT CONTRACTORS COST.
13. ALL CONTROLS WIRING SHALL BE INSTALLED IN RACEWAYS AND BE THE RESPONSIBILITY OF THE CONTROLS CONTRACTOR. RACEWAYS SHALL CONFORM TO THE FOLLOWING ELECTRICAL SPECIFICATIONS; HANGERS AND SUPPORTS FOR ELECTRICAL SYSTEMS, RACEWAYS AND BOXES FOR ELECTRICAL SYSTEMS AND SEISMIC CONTROLS FOR ELECTRICAL SYSTEMS.
14. CONTRACTOR SHALL FIELD VERIFY EXISTING FIELD CONDITIONS PRIOR TO ORDERING OR FABRICATING. ADDITIONAL COST WILL NOT BE ALLOWED FOR CONTRACTOR'S FAILURE TO BECOME FAMILIAR WITH EXISTING SITE CONDITIONS.
15. PROVIDE FACTORY AUTHORIZED STARTUP OF ALL EQUIPMENT INCLUDING STARTUP OF ANY FACTORY CONTROLS TO ENSURE PROPER SEQUENCING AND/OR COMMUNICATION TO BMS.
16. GENERAL CONTRACTOR SHALL HIRE A 3RD PARTY COMMISSIONING AGENT TO COMMISSION NEW HVAC EQUIPMENT. COMMISSIONING AGENT SHALL BE LICENSED MECHANICAL ENGINEER. COMMISSIONING AGENT TO PROVIDE COMMISSIONING PLAN LISTING EQUIPMENT AND TEST TO BE PERFORMED TO ENGINEER FOR REVIEW. COMMISSIONING AGENT SHALL PROVIDE REPORT STATING ANY SYSTEM DEFICIENCIES AND LISTING ANY DEFERRED TESTS.
17. PROVIDE OPERATION AND MAINTENANCE MANUALS (O&M) WITHIN 30 DAYS OF CERTIFICATE OF OCCUPANCY FOR ALL EQUIPMENT IN DIGITAL FORMAT TO ENGINEER FOR REVIEW. O&M'S SHALL INCLUDE DOCUMENTATION OF ALL WARRANTIES, REPORTS AND TESTS, RECORD DRAWINGS, CONTROLS SEQUENCE OF OPERATIONS WITH DIAGRAMS, & EQUIPMENT INFORMATION. EQUIPMENT INFORMATION INCLUDES MAKE & MODEL, WIRING, PIPING, STARTUP, SHUTDOWN, TROUBLE SHOOTING SYSTEM BALANCING REPORT, FINAL COMMISSIONING REPORT AND MAINTENANCE PROCEDURES.
18. PIPING AND DUCTWORK SHALL NOT BE SUPPORTED FROM THE ROOF DECK, JOIST BRIDGING OR OTHER PIPES. HANG PIPES FROM BEAMS, JOIST OR SUPPLEMENTARY STRUCTURAL MEMBERS. WHERE POSSIBLE INSTALL ALL PIPING AND DUCTWORK WITHIN 12" FROM SUPPORTING STRUCTURE.
19. WHERE JURISDICTION REQUIRES, CONTRACTOR IS RESPONSIBLE FOR PROVIDING SEISMIC RESTRAINT AND SUPPORT ENGINEERED BY A LICENSED STRUCTURAL ENGINEER. PROVIDE DESIGN DRAWINGS TO AUTHORITY HAVING JURISDICTION AND MECHANICAL ENGINEER FOR REVIEW.
20. MECHANICAL PIPING SCHEDULE:
    a. DOMESTIC WATER PIPING = TYPE L COPPER - SOLDERED
    b. REFRIGERANT PIPING = ACR TYPE L HARD-DRAWN COPPER - BRAZED
        - REFRIGERANT LINESET PIPING MATERIALS AND INSTALLATION TO BE DONE PER ASSOCIATED EQUIPMENT MANUFACTURER'S RECOMMENDATIONS.
    c. CONDENSATE DRAINAGE = DWV SOLID CORE PVC - SOLVENT CEMENT
        - CONDENSATE MATERIALS AND INSTALLATION TO BE DONE PER ASSOCIATED EQUIPMENT MANUFACTURER'S RECOMMENDATIONS.

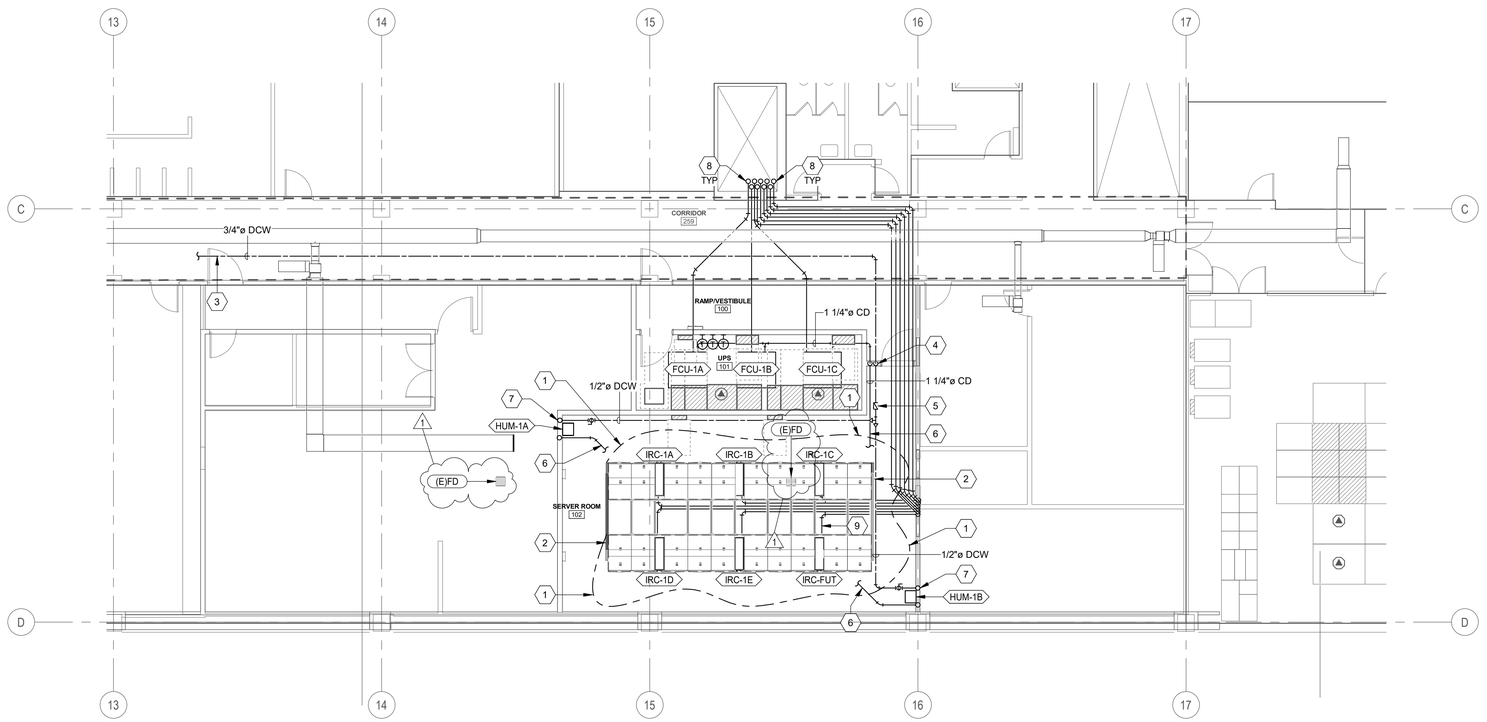

SHEET KEYNOTES

1 PROVIDE LEAK DETECTION ROPE BELOW RAISED FLOOR IN THIS APPROXIMATE LOCATION.

2 HOT AISLE CONTAINMENT SYSTEM - SEE SHEETS ET301 AND ET401 FOR DETAILS. COORDINATE ASSOCIATED AND NEARBY MECHANICAL COMPONENTS WITH HOT AISLE CONTAINMENT SYSTEM.

3 CONNECT DOMESTIC WATER PIPE TO EXISTING DOMESTIC WATER PIPE IN THIS APPROXIMATE LOCATION. FIELD VERIFY EXISTING PIPING LOCATION PRIOR TO ORDERING OR FABRICATING NEW PIPING.

4 PIPE TO DROP FROM CEILING SPACE TO RUN BELOW SUB FLOOR IN THIS APPROXIMATE LOCATION.

5 PROVIDE 3/4" DOUBLE CHECK BACKFLOW PREVENTOR BELOW RAISED FLOOR IN THIS APPROXIMATE LOCATION.

6 RUN CONDENSATE DRAIN BELOW RAISED FLOOR TO EXISTING FLOOR DRAIN IN THIS APPROXIMATE LOCATION. DRAIN TO TERMINATE ON TOP OF FLOOR DRAIN TO AVOID CONDENSATE RUNNING ON THE FLOOR.

7 PIPE UP FROM BELOW FLOOR TO HUMIDIFIER IN THIS APPROXIMATE LOCATION. INSTALL PER MANUFACTURER RECOMMENDATIONS.

8 REFRIGERANT LINESETS UP TO ROOF IN THIS APPROXIMATE LOCATION. FIELD VERIFY EXISTING CONDITIONS PRIOR TO ORDERING. SIZE AND INSTALL PER MANUFACTURER RECOMMENDATIONS. SEE ROOF PLAN FOR CONTINUATION.

9 INSTALL PIPING TO LOCATION OF FUTURE IN-ROW COOLER AND CAP IN THIS APPROXIMATE LOCATION. LABEL PIPING FOR FUTURE CONNECTION.

AGENCY APPROVAL

5A M201 **MECHANICAL PLAN**
1/8" = 1'-0"

6/3/2021 4:59:56 PM

ARCH | NEXUS

Architectural NEXUS, Inc.
2505 East Parleys Way
Salt Lake City, UT 84109
T 801.924.5000
http://www.archnexus.com

Original drawings remain the property of the Architect and as such the Architect retains total ownership and control. The design represented by these drawings is sold to the client for a one time use, unless otherwise agreed upon in writing by the Architect.
© Architectural Nexus, Inc. 2019

PROFESSIONAL ENGINEER
06-03-21
RYAN BOOGAARD
NO. 8677128
STATE OF UTAH

UNIVERSITY OF UTAH
WILLIAMS BLDG TIER 3 NETWORK NODE INTERFACE REMODEL
UNIVERSITY OF UTAH RESEARCH PARK, CHIPETA WAY
SALT LAKE CITY, UT

#	Date	Revision
1	05.21.21	PERMIT REVIEW COMMENTS

PERMIT SET

NEXUS PROJECT #: 20101
CHECKED BY: RHB
DRAWN BY: CLD
DATE: 04.13.2021

MECHANICAL PLAN

M201

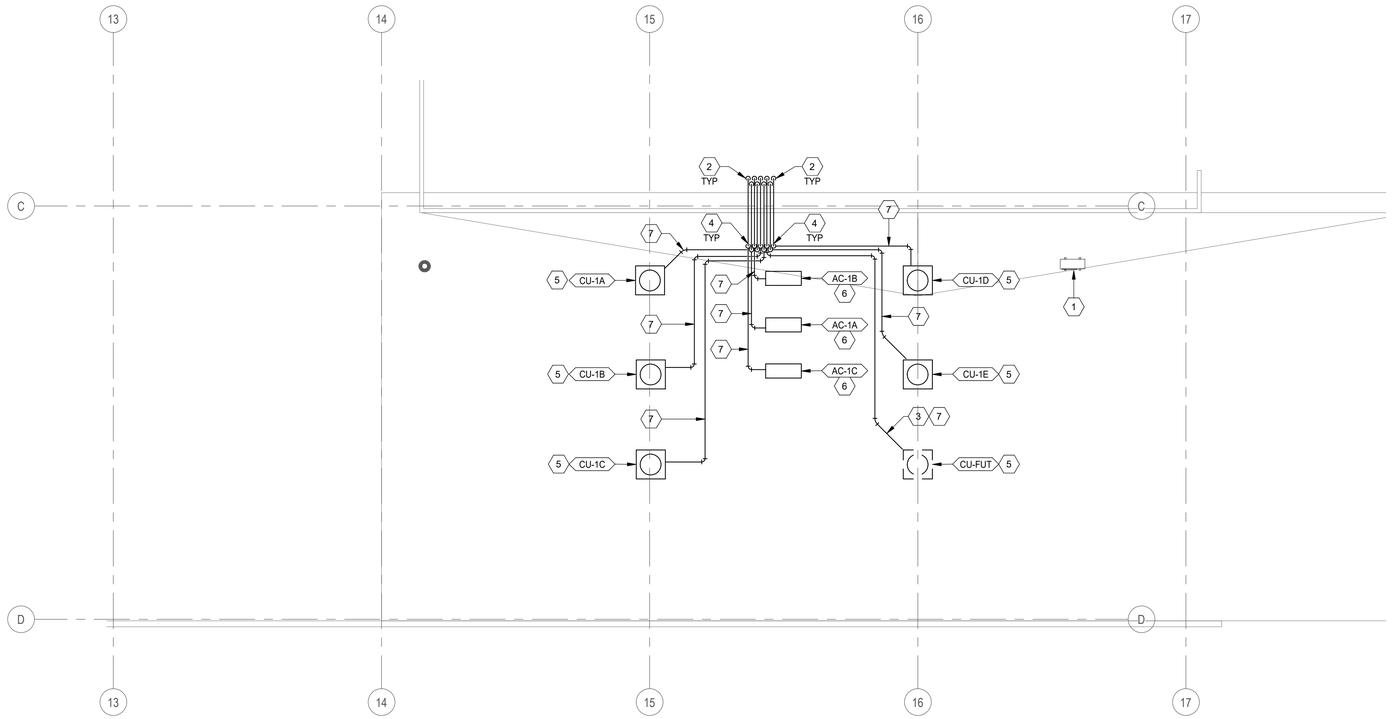

1 M211 **ROOF MECHANICAL PLAN**
1/8" = 1'-0"

GENERAL SHEET NOTES

1. ALL EQUIPMENT TO BE SELECTED BASED OFF OF SITE INFORMATION, INCLUDING CURBS EQUAL TO OR GREATER THAN DESIGN SNOW DEPTH. ELEVATION: 4700' SDB: 95°F SWB: 63°F WDB: 5°F DESIGN SNOW DEPTH: 14"
2. THIS CONTRACTOR SHALL CLOSELY COORDINATE MECHANICAL AND PLUMBING WITH ELECTRICAL, ARCHITECTURAL, AND BUILDING STRUCTURE.
3. DISSIMILAR METAL PIPING CONNECTIONS SHALL HAVE DIELECTRIC ISOLATORS.
4. ALL DOMESTIC WATER PIPING TO BE PRESSURE TESTED, CLEANED, AND DISINFECTED PER SPECIFICATIONS.
5. PROVIDE ACCESS DOORS FOR ALL SERVICEABLE EQUIPMENT OR VALVES ABOVE HARD LID CEILINGS OR IN WALLS. ALL ACCESS PANELS ARE TO BE PAINTED TO MATCH ADJACENT SURFACES.
6. ALL MATERIALS WITHIN PLENUMS SHALL BE NONCOMBUSTIBLE OR SHALL BE LISTED AND LABELED AS HAVING A FLAME SPREAD INDEX OF NOT MORE THAN 25 AND A SMOKE-DEVELOPED INDEX OF NOT MORE THAN 50 WHEN TESTED IN ACCORDANCE WITH ASTM E 84 OR UL 723.
7. INSULATE ALL PLASTIC PIPING IN CEILING PLENUM. COMPLETELY ENCLOSE PLASTIC PIPE IN INSULATION THAT MEETS THE FLAME SPREAD INDEX OF NOT MORE THAN 25 AND A SMOKE-DEVELOPED INDEX OF NOT MORE THAN 50.
8. INSULATE ALL REFRIGERANT PIPING BY FULLY ENCLOSING PIPING IN INSULATION AND PROVIDING SEALED VAPOR BARRIER. ALL REFRIGERANT PIPING SHALL BE INSULATED WITH CLOSED-CELL ELASTOMER RUBBER INSULATION WITH A FLAME/SMOKE SPREAD INDEX BETTER THAN 25/50. ANY INSULATION EXPOSED TO OUTDOOR CONDITIONS OR SUNLIGHT SHALL BE UV RESISTANT. INSULATION IS SUBJECT TO INSPECTION BY COMMISSIONING AGENT AND/OR ENGINEER FOR COMPLIANCE.
9. WHERE PIPE OR DUCT PENETRATES A RATED ASSEMBLY OR FLOOR AND IS NOT REQUIRED TO BE PROTECTED BY A DAMPER, ALL SPACE BETWEEN THE DUCT AND ASSEMBLY IS TO BE FIRE CAULKED. INSULATION OR COVERINGS ARE NOT TO CONTINUE THROUGH ASSEMBLY UNLESS TESTED AS PART OF AN APPROVED PENETRATION FIRESTOP SYSTEM.
10. THIS PROJECT MAY REQUIRE AFTER HOURS AND WEEKEND WORK TO RUN PIPING/DUCTWORK OR MODIFY SYSTEMS IN OR AFFECTING OCCUPIED SPACES. COORDINATE ALL SHUTDOWNS 72 HOURS IN ADVANCE WITH OWNER.
11. CONTROLS TO MATCH EXISTING JOHNSON CONTROLS. TIE INTO EXISTING CONTROLS DDC SYSTEM AND UPDATED GRAPHICS. PROVIDE ENGINEER WITH 2 WEEKS OF TRENDS SHOWING PROPER OPERATION OF EQUIPMENT UPON COMPLETION OF PROJECT.
12. COORDINATE EXACT THERMOSTAT LOCATIONS WITH EQUIPMENT AND WITH OWNER. FAILURE TO DO SO MAY REQUIRE MOVING THERMOSTATS AT CONTRACTORS COST.
13. ALL CONTROLS WIRING SHALL BE INSTALLED IN RACEWAYS AND BE THE RESPONSIBILITY OF THE CONTROLS CONTRACTOR. RACEWAYS SHALL CONFORM TO THE FOLLOWING ELECTRICAL SPECIFICATIONS: HANGERS AND SUPPORTS FOR ELECTRICAL SYSTEMS, RACEWAYS AND BOXES FOR ELECTRICAL SYSTEMS AND SEISMIC CONTROLS FOR ELECTRICAL SYSTEMS.
14. CONTRACTOR SHALL FIELD VERIFY EXISTING FIELD CONDITIONS PRIOR TO ORDERING OR FABRICATING. ADDITIONAL COST WILL NOT BE ALLOWED FOR CONTRACTOR'S FAILURE TO BECOME FAMILIAR WITH EXISTING SITE CONDITIONS.
15. PROVIDE FACTORY AUTHORIZED STARTUP OF ALL EQUIPMENT INCLUDING STARTUP OF ANY FACTORY CONTROLS TO ENSURE PROPER SEQUENCING AND/OR COMMUNICATION TO BMS.
16. GENERAL CONTRACTOR SHALL HIRE A 3RD PARTY COMMISSIONING AGENT TO COMMISSION NEW HVAC EQUIPMENT. COMMISSIONING AGENT SHALL BE LICENSED MECHANICAL ENGINEER. COMMISSIONING AGENT TO PROVIDE COMMISSIONING PLAN LISTING EQUIPMENT AND TEST TO BE PERFORMED TO ENGINEER FOR REVIEW. COMMISSIONING AGENT SHALL PROVIDE REPORT STATING ANY SYSTEM DEFICIENCIES AND LISTING ANY DEFERRED TESTS.
17. PROVIDE OPERATION AND MAINTENANCE MANUALS (O&M) WITHIN 30 DAYS OF CERTIFICATE OF OCCUPANCY FOR ALL EQUIPMENT IN DIGITAL FORMAT TO ENGINEER FOR REVIEW. O&M'S SHALL INCLUDE DOCUMENTATION OF ALL WARRANTIES, REPORTS AND TESTS, RECORD DRAWINGS, CONTROLS SEQUENCE OF OPERATIONS WITH DIAGRAMS, & EQUIPMENT INFORMATION. EQUIPMENT INFORMATION INCLUDES MAKE & MODEL, WIRING, PIPING, STARTUP, SHUTDOWN, TROUBLE SHOOTING SYSTEM BALANCING REPORT, FINAL COMMISSIONING REPORT AND MAINTENANCE PROCEDURES.
18. PIPING AND DUCTWORK SHALL NOT BE SUPPORTED FROM THE ROOF DECK, JOIST BRIDGING OR OTHER PIPES. HANG PIPES FROM BEAMS, JOIST OR SUPPLEMENTARY STRUCTURAL MEMBERS. WHERE POSSIBLE INSTALL ALL PIPING AND DUCTWORK WITHIN 12" FROM SUPPORTING STRUCTURE.
19. WHERE JURISDICTION REQUIRES, CONTRACTOR IS RESPONSIBLE FOR PROVIDING SEISMIC RESTRAINT AND SUPPORT ENGINEERED BY A LICENSED STRUCTURAL ENGINEER. PROVIDE DESIGN DRAWINGS TO AUTHORITY HAVING JURISDICTION AND MECHANICAL ENGINEER FOR REVIEW.
20. MECHANICAL PIPING SCHEDULE:
    a. DOMESTIC WATER PIPING = TYPE L COPPER - SOLDERED
    b. REFRIGERANT PIPING = ACR TYPE L HARD-DRAWN COPPER - BRAZED
        - REFRIGERANT LINESET PIPING MATERIALS AND INSTALLATION TO BE DONE PER ASSOCIATED EQUIPMENT MANUFACTURER'S RECOMMENDATIONS.
    c. CONDENSATE DRAINAGE = DWV SOLID CORE PVC - SOLVENT CEMENT
        - CONDENSATE MATERIALS AND INSTALLATION TO BE DONE PER ASSOCIATED EQUIPMENT MANUFACTURER'S RECOMMENDATIONS.

SHEET KEYNOTES

1 EXISTING MECHANICAL EQUIPMENT IN THIS APPROXIMATE LOCATION TO REMAIN.

2 REFRIGERANT LINESETS DOWN TO MAIN FLOOR IN THIS APPROXIMATE LOCATION. FIELD VERIFY EXISTING CONDITIONS PRIOR TO ORDERING. SIZE AND INSTALL PER MANUFACTURER RECOMMENDATIONS. SEE MECHANICAL PIPING PLAN FOR CONTINUATION.

3 INSTALL REFRIGERANT LINESET PIPING TO LOCATION OF FUTURE CONDENSING UNIT IN THIS APPROXIMATE LOCATION. CAP OFF AND LABEL FOR FUTURE CONNECTION.

4 REFRIGERANT LINESETS TO RUN ABOVE WALKWAY. PIPING TO DROP FROM 8'-6" A.F.F. TO RUN LOW ABOVE ROOF IN THIS APPROXIMATE LOCATION.

5 COORDINATE CONDENSING UNIT LOCATIONS WITH STRUCTURAL BELOW. LOCATE UNIT ON THE I BEAM AND JOIST INTERSECTION BELOW IN THIS APPROXIMATE LOCATION. SEISMICALLY RESTRAIN EEQUIPMENT - SEE ARCHITECTURAL DETAILS FOR CONDENSING UNIT ROOF CURBS.

6 COORDINATE CONDENSING UNIT LOCATIONS WITH STRUCTURAL BELOW. LOCATE UNIT ON THE STRUCTURAL JOIST BELOW IN THIS APPROXIMATE LOCATION. SEE ARCHITECTURAL DETAILS FOR CONDENSING UNIT ROOF CURBS.

7 REFRIGERANT LINESET ON ROOF IN THIS APPROXIMATE LOCATION. SIZE AND INSTALL PER MANUFACTURER'S RECOMMENDATIONS. PROVIDE WITH ROOF SUPPORTS PER ROOF PIPING SUPPORT DETAIL. INSULATE ALL EXPOSED PIPING AND PAINT WITH UV PROTECTIVE PAINT.

AGENCY APPROVAL

ARCH | NEXUS

Architectural NEXUS, Inc.
2505 East Parleys Way
Salt Lake City, UT 84109
T 801.924.5000
http://www.archnexus.com

Original drawings remain the property of the Architect and as such the Architect retains total ownership and control. The design represented by these drawings is sold to the client for a one time use, unless otherwise agreed upon in writing by the Architect.
© Architectural Nexus, Inc. 2019

PROFESSIONAL ENGINEER
05-18-21
RYAN
BOOGAARD
NO. 8677128
STATE OF UTAH

Exp: 03-31-23

UNIVERSITY OF UTAH
WILLIAMS BLDG TIER 3 NETWORK NODE INTERFACE REMODEL
UNIVERSITY OF UTAH RESEARCH PARK, CHIPETA WAY
SALT LAKE CITY, UT

#	Date	Revision

PERMIT SET

NEXUS PROJECT #: 20101
CHECKED BY: RHB
DRAWN BY: CLD
DATE: 04.13.2021

MECHANICAL ROOF PLAN

M211

5/18/2021 5:09:07 PM

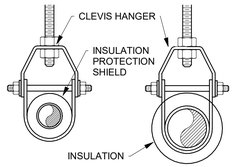

MSS SP-69
TYPE 1
PIPE TEMPERATURE
BELOW AMBIENT
INSULATED

MSS SP-69
TYPE 1
PIPE TEMPERATURE
ABOVE AMBIENT
INSULATED OR
UNINSULATED

NOTES:
1. STEEL PIPE HANGERS FOR PLASTIC PIPE SHALL BE PLASTIC COATED.
2. STEEL PIPE HANGERS FOR COPPER PIPE SHALL BE PLASTIC COATED.

4C PIPE HANGER DETAIL
M501 1/8" = 1'-0"

TYPE	G
1	1 3/8"
11	1 3/4"

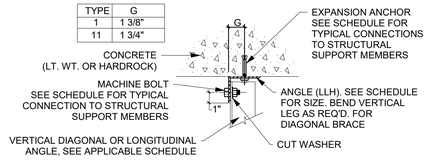

RESTRAINT CONNECTIONS TO CONCRETE DETAIL A

TYPE	G
111	3"
1V	3-3/4"
V	4-1/2"

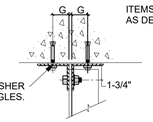

RESTRAINT CONNECTIONS TO CONCRETE DETAIL B

TYPE	G
VI	7-1/2"
VII	9"

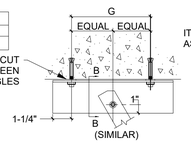

RESTRAINT CONNECTIONS TO CONCRETE DETAIL C

3C RESTRAINT CONNECTIONS TO CONCRETE
M501 1/8" = 1'-0"

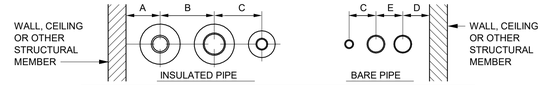

MINIMUM CENTERLINE SPACING				
NOMINAL PIPE SIZE	DIM A	DIM B	DIM D	DIM E
1/2"-3/4"	5"	6"	3 1/2"	3"
1"-1 1/4"-1 1/2"	6"	8"	4"	4"
2"-2 1/2"	7"	10"	4 1/2"	5"
3"-3 1/2"	7 1/2"	11"	5"	6"
4"	8"	12"	5 1/2"	7"
5"	8 1/2"	13"	6"	8"
6"	9"	14"	6 1/2"	9"
8"	10"	16"	7 1/2"	11"

1D PIPE CLEARANCES DETAIL
M501 1/8" = 1'-0"

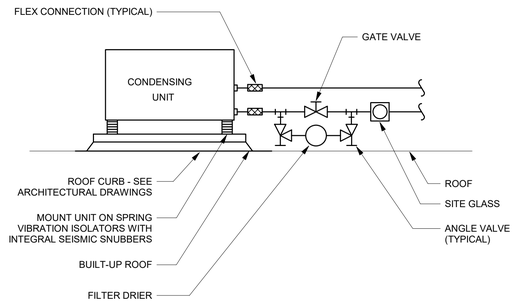

1C REFRIGERANT PIPING SCHEMATIC DETAIL
M501 3/16" = 1'-0"

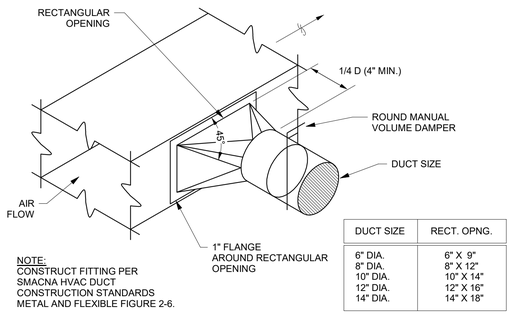

NOTE:
CONSTRUCT FITTING PER SMACNA HVAC DUCT CONSTRUCTION STANDARDS METAL AND FLEXIBLE FIGURE 2-6.

DUCT SIZE	RECT. OPNG.
6" DIA.	6" X 9"
8" DIA.	8" X 12"
10" DIA.	10" X 14"
12" DIA.	12" X 16"
14" DIA.	14" X 18"

1B DUCT TAKE-OFF DETAIL
M501 1/8" = 1'-0"

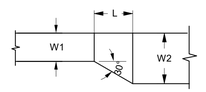

ECCENTRIC TRANSITION:
MAX. 30° ANGLE
EXCEPT 45° IS PERMITTED AT ROUND TO FLAT OVAL
L (MIN.) = (W2-W1)/0.58 FOR 30°
L (MIN.) = W2-W1 FOR 45°

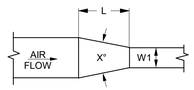

CONVERGING CONCENTRIC TRANSITION:
X° = 60° MAX.
L (MIN) = (W

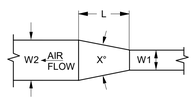

DIVERGING CONCENTRIC TRANSITION:
X° = 45° MAX.
L (MIN.) = (W2 - W1) / 2

NOTE:
UNLESS OTHERWISE INDICATED ON PLANS, MAXIMUM ANGLES SHOWN SHALL APPLY.

5A DUCT TRANSITIONS DETAIL
M501 1/8" = 1'-0"

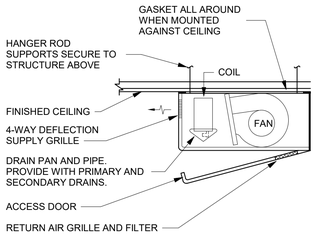

HORIZONTAL CABINET FAN COIL UNIT

1. UNLESS OTHERWISE NOTED, ALL UNITS SHALL BE MOUNTED AGAINST FINISHED CEILING.
2. SEE DETAIL FOR SUPPLY AND RETURN PIPING CONNECTIONS TO COIL.
3. SEE FAN COIL UNIT SCHEDULE FOR PIPE SIZES.

4B CABINET FAN COIL UNIT DETAIL
M501 1/8" = 1'-0"

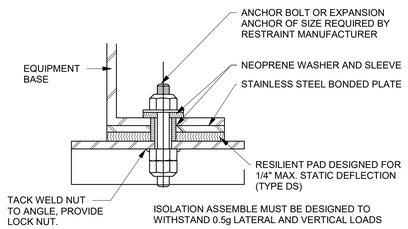

4A RESTRAINT PAD ISOLATOR RESTRAINT
M501 1/8" = 1'-0"

ROOF PIPE SUPPORT SCHEDULE	
PIPE SIZE	MAXIMUM SPACING
1"	6'-0"
1 1/4"	6'-0"
1 1/2"	6'-0"
2"	6'-0"
2 1/2"	8'-0"
3"	8'-0"
4"	8'-0"

NOTES:

1. SUPPORTED PIPE AT ALL ELBOWS AND AT SPACING SPECIFIED.
2. PIPE SUPPORT BLOCK SHALL BE A MINIMUM OF ONE PIPE SIZE LARGER TAHN PIPE
3. DO NOT ATTACH PIPESTANDS TO ROOF

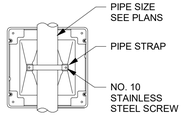

3B ROOF PIPING SUPPORT DETAIL
M501 1/8" = 1'-0"

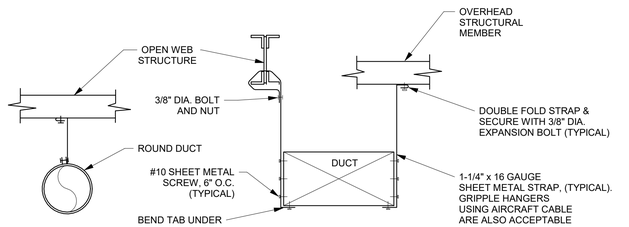

NOTE:
USE SPECIFIED SPACING AND NOT LESS THAN ONE SUPPORT PER BRANCH.

NOTE:
ONE HANGER REQUIRED DUCT 24" DIA. AND SMALLER, TWO HANGERS REQUIRED FOR DUCTS 26" DIA. AND LARGER.

NOTE:
REFER TO SMACNA HVAC DUCT CONSTRUCTION STANDARDS METAL AND FLEXIBLE - THIRD EDITION FOR ALL REQUIREMENTS

3A DUCT HANGER DETAIL
M501 1/8" = 1'-0"

ARCH | NEXUS
Architectural NEXUS, Inc.
2505 East Parleys Way
Salt Lake City, UT 84109
T 801.924.5000
http://www.archnexus.com

Original drawings remain the property of the Architect and as such the Architect retains total ownership and control. The design represented by these drawings is sold to the client for a one time use, unless otherwise agreed upon in writing by the Architect.
© Architectural Nexus, Inc. 2019

PROFESSIONAL ENGINEER
05-18-21
RYAN
BOOGAARD
NO. 8677128
STATE OF UT
Exp: 03-31-23

UNIVERSITY OF UTAH
WILLIAMS BLDG TIER 3 NETWORK NODE INTERFACE REMODEL
UNIVERSITY OF UTAH RESEARCH PARK, CHIPETA WAY
SALT LAKE CITY, UT

#	Date	Revision

AGENCY APPROVAL

PERMIT SET

NEXUS PROJECT #: 20101
CHECKED BY: RHB
DRAWN BY: CLD
DATE: 04.13.2021

MECHANICAL DETAILS

M501

5/18/2021 5:09:09 PM

IN ROW COOLER SCHEDULE

LABEL	FANS NO.	FANS CFM	FANS TYPE	COOLING COILS RATED CAP. (kW)	COOLING COILS DESIGN RETURN AIR TEMP.	COOLING COILS FACE AREA (FT2)	COOLING COILS ROWS	SOUND RATING	VOLTAGE	PHASE	Hz	FLA	MCA	MOCP	SCOP	EMERGENCY POWER	DISCONNECT FURN BY ELEC	DISCONNECT FURN BY MECH	WEIGHT	MANUFACTURER	MODEL	REMARKS
IRC-1A	8	3200	EC	30.0	104 °F	5.49	3	77.1	208	1	60	8 A	9.3	15	3.2	YES	YES	NO	180	SCHNEIDER ELECTRIC	ACRD307	1,2,3,4,5,6,7,8
IRC-1B	8	3200	EC	30.0	104 °F	5.49	3	77.1	208	1	60	8 A	9.3	15	3.2	YES	YES	NO	180	SCHNEIDER ELECTRIC	ACRD307	1,2,3,4,5,6,7,8
IRC-1C	8	3200	EC	30.0	104 °F	5.49	3	77.1	208	1	60	8 A	9.3	15	3.2	YES	YES	NO	180	SCHNEIDER ELECTRIC	ACRD307	1,2,3,4,5,6,7,8
IRC-1D	8	3200	EC	30.0	104 °F	5.49	3	77.1	208	1	60	8 A	9.3	15	3.2	YES	YES	NO	180	SCHNEIDER ELECTRIC	ACRD307	1,2,3,4,5,6,7,8
IRC-1E	8	3200	EC	30.0	104 °F	5.49	3	77.1	208	1	60	8 A	9.3	15	3.2	YES	YES	NO	180	SCHNEIDER ELECTRIC	ACRD307	1,2,3,4,5,6,7,8
IRC-FUT	8	3200	EC	30.0	104 °F	5.49	3	77.1	208	1	60	8 A	9.3	15	3.2	YES	YES	NO	180	SCHNEIDER ELECTRIC	ACRD307	1,2,3,4,5,6,7,8

1. PROVIDE WITH FACTORY INSTALLED CONDENSATE PUMP.
2. PROVIDE WITH SECONDARY CONDENSATE PUMP SAUERMANN SI-20 WITH FACTORY INSTALLED SAFETY ALARM. CONNECT SAFETY ALARM TO BUILDING BMS SYSTEM.
3. PROVIDE FACTORY AUTHORIZED STARTUP OF EQUIPMENT INCLUDING STARTUP OF ANY FACTORY CONTROLS TO ENSURE PROPER SEQUENCING AND/OR COMMUNICATION TO BMS SYSTEM.
4. PROVIDE WITH DUAL POWER CONNECTION.
5. PROVIDE WITH BUILT IN LEAK DETECTION CABLE.
6. PROVIDE WITH HUMIDITY MONITOR.
7. PROVIDE WITH STANDARD WASHABLE FILTER AND 1 SET OF OPTIONAL PLEATED MERV-8 FILTERS FOR USE DURING FIRST MONTH OF OPERATION.
8. MANUFACTURER'S REPRESENTATIVE TO PARTICIPATE IN WEEKLY COMMISSIONING MEETINGS.

FAN COIL UNIT SCHEDULE

LABEL	CFM	COOLING CAPACITY (kW) TOTAL	COOLING CAPACITY (kW) SENSIBLE	SOUND RATING	VOLTAGE	PHASE	Hz	FLA	MCA	MOP	EMERGENCY POWER	DISCONNECT FURN BY ELEC	DISCONNECT FURN BY MECH	WEIGHT	MANUFACTURER	MODEL	REMARKS
FCU-1A	1800	12.1	10.8	30	208	1	60	5 A	6.4 A	15 A	YES	YES	NO	375	SCHNEIDER ELECTRIC	UCF0481I	1,2,3,4,5,6
FCU-1B	1800	12.1	10.8	30	208	1	60	5 A	6.4 A	15 A	YES	YES	NO	375	SCHNEIDER ELECTRIC	UCF0481I	1,2,3,4,5,6
FCU-1C	1800	12.1	10.8	30	208	1	60	5 A	6.4 A	15 A	YES	YES	NO	375	SCHNEIDER ELECTRIC	UCF0481I	1,2,3,4,5,6

1. ACCEPTABLE MANUFACTURERS: SCHNEIDER ELECTRIC, VERTIV, STULZ.
2. PROVIDE FACTORY AUTHORIZED STARTUP OF EQUIPMENT INCLUDING STARTUP OF ANY FACTORY CONTROLS TO ENSURE PROPER SEQUENCING AND/OR COMMUNICATION TO BMS.
   A. PROVIDE WITH BACNET CONTROLLER TO TIE INTO EXISTING JOHNSON CONTROLS SYSTEM.
3. PROVIDE WITH PHASE LOSS DETECTION. PHASE LOSS DETECTION MUST MONITOR ALL THREE PHASES.
4. PROVIDE WITH 5 YEAR COMPRESSOR WARRANTY.
5. MANUFACTURER'S REPRESENTATIVE TO PARTICIPATE IN WEEKLY COMMISSIONING MEETINGS.
6. PROVIDE WITH CONDENSATE PUMP, DRAIN PAN, AND SECONDARY DRAIN PAN.

CONDENSING UNIT SCHEDULE (AIR-COOLED)

LABEL	SERVES	COOLING CAP. (MBH)	REFRIGERANT TYPE	REFRIGERANT CHARGE	VOLTAGE	PHASE	Hz	MCA	MOP	EMERGENCY POWER	DISCONNECT FURN BY ELEC	DISCONNECT FURN BY MECH	WEIGHT	MANUFACTURER	MODEL	REMARKS
AC-1A	FCU-1A	40.0	R410A	22 LBS	208	1	60	27 A	40 A	YES	YES	NO	375	SCHNEIDER ELECTRIC	MRA0611D	1,2,3,4,5
AC-1B	FCU-1B	40.0	R410A	22 LBS	208	1	60	27 A	40 A	YES	YES	NO	375	SCHNEIDER ELECTRIC	MRA0611D	1,2,3,4,5
AC-1C	FCU-1C	40.0	R410A	22 LBS	208	1	60	27 A	40 A	YES	YES	NO	375	SCHNEIDER ELECTRIC	MRA0611D	1,2,3,4,5
CU-1A	IRC-1A	92.1	R410A	105 LBS	480	3	60	21 A	40 A	YES	YES	NO	725	SCHNEIDER ELECTRIC	ACCU30102	1,2,3,4,5
CU-1B	IRC-1B	92.1	R410A	105 LBS	480	3	60	21 A	40 A	YES	YES	NO	725	SCHNEIDER ELECTRIC	ACCU30102	1,2,3,4,5
CU-1C	IRC-1C	92.1	R410A	105 LBS	480	3	60	21 A	40 A	YES	YES	NO	725	SCHNEIDER ELECTRIC	ACCU30102	1,2,3,4,5
CU-1D	IRC-1D	92.1	R410A	105 LBS	480	3	60	21 A	40 A	YES	YES	NO	725	SCHNEIDER ELECTRIC	ACCU30102	1,2,3,4,5
CU-1E	IRC-1E	92.1	R410A	105 LBS	480	3	60	21 A	40 A	YES	YES	NO	725	SCHNEIDER ELECTRIC	ACCU30102	1,2,3,4,5
CU-FUT	IRC-FUTURE	92.1	R410A	105 LBS	480	3	60	21 A	40 A	YES	YES	NO	725	SCHNEIDER ELECTRIC	ACCU30102	1,2,3,4,5

1. ACCEPTABLE MANUFACTURERS: SCHNEIDER ELECTRIC, VERTIV, STULZ.
2. PROVIDE FACTORY AUTHORIZED STARTUP OF EQUIPMENT INCLUDING STARTUP OF ANY FACTORY CONTROLS TO ENSURE PROPER SEQUENCING AND/OR COMMUNICATION TO BMS.
   A. PROVIDE WITH BACNET CONTROLLER TO TIE INTO EXISTING JOHNSON CONTROLS SYSTEM.
3. PROVIDE WITH PHASE LOSS DETECTION. PHASE LOSS DETECTION MUST MONITOR ALL THREE PHASES.
4. PROVIDE WITH 5 YEAR COMPRESSOR WARRANTY.
5. MANUFACTURER'S REPRESENTATIVE TO PARTICIPATE IN WEEKLY COMMISSIONING MEETINGS.
6. INSTALL REFRIGERANT PIPING PER MANUFACTURER'S RECOMMENDATIONS, INCLUDING THE ADDITION OF INVERTED PIPING LOOPS AND/OR TRAPS ON PIPE RISERS AS DESCRIBED IN THE INSTALLATION MANUAL.
   A. REFRIGERANT CHARGE IS ESTIMATED AND SHALL BE FIELD VERIFIED BASED OFF OF INSTALLED REFRIGERANT PIPING LENGTH.

IMC 1103 REFRIGERANT CALCULATIONS

SPACE	Volume	AMOUNT OF REFRIGERANT (R410A - LBS) ALLOWABLE RATE (PER 1000 CF)	ALLOWABLE - SPACE	ACTUAL
CORRIDOR	30010 CF	26	780	718

HUMIDIFIER SCHEDULE

LABEL	TYPE	CAPACITY (lb/hr)	NO. OF TANKS	DIMENSIONS	INPUT kW	VOLTAGE	PHASE	Hz	EMERGENCY POWER	DISCONNECT FURN BY ELEC	DISCONNECT FURN BY MECH	MANUFACTURER	MODEL	REMARKS
HUM-1A	WALL MOUNTED	2.5	1	16.5" X 26.4" X 14.6"	3.9	208	1	60	YES	YES	NO	CONDAIR	RS 010	1,2,3,4,5
HUM-1B	WALL MOUNTED	2.5	1	16.5" X 26.4" X 14.6"	3.9	208	1	60	YES	YES	NO	CONDAIR	RS 010	1,2,3,4,5

1. PROVIDE WITH BUILT-ON BLOWER FOR DIRECT ROOM HUMIDIFICATION.
2. PROVIDE WITH BACNET CONTROLLER TO TIE INTO EXISTING CONTROLS SYSTEM.
3. PROVIDE WITH DRAIN AND ROUTE TO NEAREST FLOOR DRAIN.
4. PROVIDE WITH SCALE COLLECTOR TANK AND INSTALL PER MANUFACTURER'S RECOMMENDATIONS.
5. MANUFACTURER'S REPRESENTATIVE TO PARTICIPATE IN WEEKLY COMMISSIONING MEETINGS.

AGENCY APPROVAL

5/18/2021 5:09:10 PM

ARCH | NEXUS

Architectural NEXUS, Inc.
2505 East Parleys Way
Salt Lake City, UT 84109
T 801.924.5000
http://www.archnexus.com

Original drawings remain the property of the Architect and as such the Architect retains total ownership and control. The design represented by these drawings is sold to the client for a one time use, unless otherwise agreed upon in writing by the Architect.
© Architectural Nexus, Inc. 2019

PROFESSIONAL ENGINEER
05-18-21
RYAN BOOGAARD
NO. 8677128
STATE OF UTAH
Exp: 03-31-23

UNIVERSITY OF UTAH
WILLIAMS BLDG TIER 3 NETWORK NODE INTERFACE REMODEL
UNIVERSITY OF UTAH RESEARCH PARK, CHIPETA WAY
SALT LAKE CITY, UT

#	Date	Revision
1	05.21.21	PERMIT REVIEW COMMENTS

PERMIT SET

NEXUS PROJECT #: 20101
CHECKED BY: RHB
DRAWN BY: CLD
DATE: 04.13.2021

MECHANICAL SCHEDULES

M601

GENERAL INFORMATION

A. Contractor shall Understand these plans and ensure that personnel responsible for the seismic bracing understand their portion of the work. Submit request to the Engineer of Record (EOR) for approval before proceeding with changes.
B. Contractor shall NOT modify any structural components or other MEP component unless specifically directed to do so in the details without written approval from the Structural Engineer of Record.
C. Contractor shall be responsible for safety on and around the job site.
D. Contractor shall verify locations, weights and sizes of equipment, trapezes, etc. prior to their installation on supporting elements. Report sizes and locations that differ from those shown on the drawings to the EOR for review. Additional bracing or framing maybe required if actual component differs significantly from basis of design.
E. Contractor shall report situations not covered by the drawings to the EOR.
F. Contractor shall coordinate inspections, testing, and structural observations as work proceeds. Notify the EOR 1 week prior to any required structural observations. Additional seismic bracing may be required at the time of the observation if layouts have changed significantly from basis of design/shop drawings.
G. These structural notes and drawings complement the project specifications and define the bracing and anchorage requirements to meet both the project specifications and the building code.
H. Specific details, sections and notes on these drawings govern over these general notes and typical details.
I. Where specific details are not referenced. on the drawings apply typical or similar details UNO.
J. DO NOT scale plans or details for dimensional information. All dimension shall be field verified prior to fabrication of bracing components, pads etc.
K. Construction, inspection, materials, testing, and workmanship shall conform to the requirements of the governing building code.
L. Bring omissions, conflicts or discrepancies between the elements of the contract documents to the attention of the EOR before proceeding with work involved.
M. In case of conflicts or discrepancies, without EOR direction, follow the most stringent requirements.
N. This design is for support and seismic bracing of **DATA RACK, CABLE TRAY AND MISC ELECTRICAL PANELS AND EQIPMENT** only. Other trades may not support items from the seismic support frame unless approval is given by the EOR. Contractor shall not suspend data rack items from supprts of other trades.
O. The owner shall maintain the loading shown in the Basis of Design throughout the life span of the building. DO NOT exceed the allowable design loads.
P. Site observations by SPECTRUM ENGINEERS representative shall not be construed as approval of construction until a final letter has been written by the EOR stating that the installation meets the Projects Specifications and criteria.
Q. Material substitutions are not allowed unless approved by the EOR. Submit requests to the EOR.

BASIS OF DESIGN

NONSTRUCTURAL SEISMIC BRACING (NSB)

A. BUILDING CODE — 2018 IBC

B. RISK CATEGORY OF STRUCTURE — III

C. EFFECTIVE SEISMIC WEIGHT OF NONSTRUCTURAL DESIGN COMPONENTS

A.	4 Post Data Rack	3000#
B.	Cable Tray (per tier)	15plf
C.	Raised Access Panel Floor	12 psf
D.	RTU	650#
E.	UPS	
F.	FAN	

D. LATERAL ANALYSIS

1. SEISMIC DESIGN
   a. DESIGN PROCEDURE: ASCE 7-16 CHAPTER 13- LRFD STRENGTH DESIGN
   b. SEISMIC DESIGN CATEGORY: D
   c. IMPORTANCE FACTOR: I_p 1.0
   d. OCCUPANCY CATEGORY: III
   e. SITE CLASS D
   f. SEISMIC DESIGN PARAMETERS (g):

S_S=0.1.22 S_1= 0.452
S_{DS}=0.978 S_{D1}=0.0.557

2. SEISMIC DESIGN FORCE: F_P

Ground Floor $Fp= 0.293\ W_p$

APPROVED MATERIALS AND MANFAUCTURERS

1. BRACE MATERIALS SHALL CONFORM AS FOLLOWS:

A. Seismic framing components and accessories shall be as manufactured by UNISTRUT CORPORATION, POWER-STRUT or equal. All strut framing channel shall be 12 ga. structural grade steel and shall confrom to the following ASTM specifiacitons:
   a. A 653 GR 33
   b. A 1011 SS GR 33

B. Threaded Hanger Rods: ASTM A36, A575, A576 or A653 F_{ymin}=32ksi

C. Strut Brace Channel: ASTM A 1011 SS GR 33 or A 653 GR 33

D. Fittings and Accesories: ASTM A36, A575, A576, A635

E.

F. Brace Anchors:
1/2" ∅ concrete anchor that must have an approved ICC-ESR report and be approved for use in cracked and uncracked concrete.
See anchor bolt section for approved anchors or submit alternate to EOR for approval.

G. Exterior Equipment Anchor: Exterior bolts used to bolt down roof top equipment shall be stainless steel type 304/316. All hardware, washer, nuts etc. shall be stainless steel other corrosion resistnat material .

ANCHOR BOLTS

POST INSTALLED CONCRETE ANCHOR BOLTS

a. Anchor design for structural and nonstructural components shall be in accordance with Chapter 17 of ACI 318-14.
b. Concrete anchors shall be approved for use in cracked concrete and have an approved ICC report UNO.
c. Post installed anchors shall be installed by qualified personnel and in accordance with the manufacturers printed installation instructions (MPII). Existing reinforcing bars shall not be damaged. Drilled holes striking rebar shall immediately be abandoned and patched. The hole shall be relocated or where not feasible contact EOR. Where anchors are installed in pre or post tensioned slabs the reinforcing strands shall be located via X-ray or similar scan. Do not install anchor within 1-1/2" inches pre-stressing strand.
d. Subcontractor shall supply all equipment required for anchor bolt installation according to MPII. This includes but is not limited to drills, setting tools, clean out brushes, blow-out bulbs, oil free compressed air, vacuums, wrenches etc. as required for installation per manufacturer.
e. Anchors installed in exterior applications or exposed to the moisture shall be hot-dip galvanized per ASTM A153 or stainless steel of type 304/316 per ASTM A193,A320 and F593.
f. Nuts, washers, and other hardware used with an all-threaded bar adhesive anchor system or with a mechanical (expansion or screw) anchor shall have a material or an alloy designation that is compatible with the anchor rod/alloy. Galvanized assemblies shall be hot-dip galvanized in accordance with ASTM A153 Class C. Electroplate galvanizing is not acceptable. Dissimilar metal assemblies shall be separated by nylon, EPDM, or other approved non-metallic washer.
g. Concrete at time of adhesive anchor installation shall have a minimum age of 21 days. For installation of adhesive anchors in concrete having an age less than 21 days, tests shall be conducted to verify the performance of the product in accordance with ACI 355.4
h. Installation of adhesive anchors in orientations from horizontal to vertical to support sustained tension loads shall be performed by personnel certified by the ACI Adhesive Anchor Installer Certification program or equivalent. These anchors are designated with a (CERT) after the anchor callout.

Mechanical anchors shall be tested and assessed in accordance with the most recent edition of ACI 355.2 Qualification of Post Installed Mechanical Anchors in Concrete and Commentary. Acceptable mechanical anchors are as follows:

Screw anchor:
1. Kwik HUS-EZ (ESR 3027) by Hilti Corporation
2. Screw-Bolt + (ESR 3889) by DeWalt-Powers
3. Titen HD (ESR-1056) by Simpson Strong Tie Inc.
4. Alternate screw anchors may be used if an ESR-ICC approval report for use in Cracked concrete is submitted to the EOR prior to use.

Wedge anchor:
1. Kwik Bolt TZ (ESR-1917) by Hilti Corporation
2. Powers-Stud + (ESR 2818) by DeWalt-Powers
3. Strong Bolt 2 (ESR-3037) by Simpson Strong Tie Inc.
4. Alternate wedge anchors may be used if an ESR-ICC approval report for use in Cracked concrete is submitted to the EOR prior to use.

Adhesive anchor systems shall be tested and assessed in accordance with the most recent edition of ACI 355.4 Qualification of Post-Installed Adhesive Anchors in Concrete (355.4) and Commentary. Acceptable adhesive anchors are as follows:

Adhesive anchors:
1. HIT HY 200 (ESR-3187) by Hilti Corporation
2. Pure 110+ (ESR 3298) by DeWalt-Powers
3. SET-XP (ESR-2508) by Simpson Strong Tie Inc.
4. Alternate epoxies may be used if an ESR-ICC approval report for use in Cracked concrete is submitted to the EOR prior to use.

FIELD QUALITY CONTROL

a. The International Building Code (IBC 2018) requires special inspection of all post-installed anchors. ACI 318-14 sections 26.13.1.5 and 26.13.1.6 require that all inspections of mechanical and adhesive anchors, respectively, are performed by a certified field inspector specifically approved for that purpose by the Licensed Design Professional and the building official. Certification is established through an independent assessment such as the ACI Post-Installed Concrete Anchor Installation Inspector Program or similar program with equivalent requirements. Adhesive anchors installed in horizontal or upwardly inclined orientations to resist sustained tension loads shall be continuously inspected during installation by a certified inspector.
b. Post-installed expansion and adhesive anchors shall be proof-loaded.
   1. Proof loading shall be conducted as confined tension testing for adhesive anchors using a center-hole cylinder.
   2. The independent testing laboratory shall submit an anchorage testing plan to the licensed design professional to ensure the testing requirements are fulfilled.
c. Proof loading of adhesive anchors shall be performed after a minimum curing period specified by the manufacturer.
d. Anchors shall have no visible indications of displacement or damage during or after proof load application. Concrete cracking in the vicinity of the anchor after loading shall be considered a failure.
f. If more than **10** ercent of the tested anchors fail to achieve the specified proof load within the limits defined on these Drawings, **an additional 25** percent of the anchors of the same diameter and type as the failed anchor shall be proof tested, unless otherwise directed by the licensed EOR or owner.

CAST IN-PLACE ANCHOR BOLTS

a. Anchor bolts shall have ASTM A563 heavy hex nut and hardened washers
   1. Typical anchor bolts shall be ASTM F1554 Grade 36 Headed Bolts.
   2. High strength application are noted on plan and shall use ASTM F1554 Grade 105 Headed Bolts
b. Contractor shall furnish templates, mock ups, etc as required prior to placing anchors to ensure proper installation and clearances.
c. Minimum embedment of all anchors shall be 2-1/2". Refer to individual details for connections that require greater embedment lengths.

STATEMENT OF SPECIAL INSPECTION AND QUALITY ASSURNCE

Special Inspection and Quality Assurance as required per IBC 2018 section 1704 and 1705

General Requirements

1. Special Inspection shall be provided by an independent agency employed by the owner or owner's authorized agent unless the requirement is exempted by the authority having jurisdiction over the project. Special Inspections are required in addition to any inspections performed by local building departments and in addition to structural
2. The names and credentials of the Special Inspectors to be used shall be submitted to the Authority having Jurisdiction for approval.

Responsibility of the Inspector

1. Review all work listed in the special inspection schedules for conformance with the construction documents, specifications and in accordance with IBC 2018
2. Keep record of each inspection and provide inspection reports to the Authority Having Jurisdiction, Architect, Contractor and the Engineer of Record for review. Any items found not to be in compliance with the construction documents shall be brought to the attention of the contractor correction. Items not corrected shall be brought to the attention of the Architect, Engineer, and Authority Having Jurisdiction.
3. A final signed report shall be submitted the Authority Having Jurisdiction stating the work inspected by the special inspector was done to the best of the inspectors knowledge in accordance with the approved construction documents, specification and IBC 2018.

Responsibility of the Contractor

1. In accordance with IBC 2018 1704.4 the contractor shall submit in writing a statement acknowledging they are aware of the special inspection requirements and that they will coordinate and cooperate with the required inspections as noted on the Special Inspection Schedules herein.
2. Coordinate the timing and frequency of the inspections. Do not proceed with subsequent work until testing and inspection has been completed and approved.
3. Correct deficient work at no additional cost to the owner
4. A final signed report shall be submitted the Authority Having Jurisdiction stating the work inspected by the special inspector was done to the best of the inspectors knowledge in accordance with the approved construction documents, specification and IBC 2018.

Fabrication Shop Requirements

1. Special inspection shall be provided in the shop during the fabrication process, unless the work is being done by a fabricator registered and approved to perform such work without special inspection. Verification of such approval shall be required.
2. At the completion of the work the fabricator shall submit a certificate of compliance to the Authority Having Jurisdiction stating the work was completed in accordance with the approved construction documents, specifications and IBC 2018

MINIMUM SPECIAL INSPECTION CRITERIA IBC 2018- NONSTRUCTURAL COMPONENTS

Electrical and Mechanical Components located in Seismic Design Category C, D,E and F per IBC 2018 Section 1705.12.4 and 1705.12.6

Concrete Footing, Exterior Concrete Slabs

Items for Inspection and Verifications	Inspection Frequency: Continuous	Inspection Frequency: Periodic	Description of inspection and frequency
Designated Seismic Systems	-	x	Verify that the manufacturers certificate of compliance matches the project design code and that the means of certification complies with the methods described in ASCE7-16 Section 13.2.2 for Certification of Designated Seismic Systems. Verify anchorage layout, size, and quantity matches the certificate of compliance.
Emergency and/or standby power system anchorage to structure	-	x	Verify that the anchorage layout, size and quantity matches that shown in the construction documents or as stipulated by the manufacturer
Seismic supports for electrical raceways, ~~cable~~ trays and lights Seismic Design Category E and F only	-	x	Verify that the seismic restraint system anchorage, spacing and components comply with approved construction documents.
Mechanical components and equipment carrying hazardous materials.	-	x	Verify that the seismic restraint system anchorage, spacing and components comply with approved construction documents.
Piping systems carrying combustible or highly toxic substances.	-	x	Verify that the seismic restraint system anchorage, spacing and components comply with approved construction documents.
Verify minimum clearance between MEP components, equipment and structure where automatic fire sprinkler system is installed	-	x	1. Verify minimum clearance per ASCE7-16-13.2.3, or 2. A nominal clearance of not less than 3 inches has been provided between fire protection sprinklers system drops and sprigs: structural members, equipment attached to the structure and other piping systems, or 3. Where flexible sprinkler hose fittings are provided inspection of minimum clearance is not required

STRUCTURAL OBSERVATION PER IBC 2018 1704.6

Statement of Inspection requirements, extent, and frequency of visits

Description: The owner or owners authorized agent shall employ the Engineer of Record, approved subordinate of the Engineer of Record, or other registered design professional to perform structural observations as required per the 2018 IBC and as noted in this section. Structural observation does not take the place of Special inspections. At the conclusion of the site visit the structural observer shall submit to the owner and Authority having jurisdiction a written statement that the site visit has been made and shall include any deficiencies that to the best of the observers knowledge have not been resolved. Items Required by Code must be performed. Other items of concern to the Engineer of Record are optional, unless mandated or required by the Authority having Jurisdiction. (Note: Structural Observation is required by code when the following apply :Risk Category IV, High rise building, as required by design professional responsible for structural design, as required by authority have jurisdiction, Risk Category III and IV structures in Design Category D,E and F and where V_{asd} >130 mph in Risk Category III IV.)

Items for Observation	Required by Code: YES	Required by Code: NO	Proposed Frequency and description of Observation
Floor mounted electrical equipment	-	x	After all anchors have been installed and torqued to adequate values
Suspended Electrical equipment		x	After all anchors braces etc. are in-place
Seismic bracing of trapeze support conduit, buses and crable tray		x	After all braces, anchors, and components are in-place and before they have covered by ceiling etc.

NONSTRUCTURAL ABBREVIATIONS

A.B.	ANCHOR BOLT
ATR	ALL THREAD ROD
DIA	DIAMETER
EOR	ENGINEER OF RECORD
EMT	ELECTRICAL METAL TUBING
FW	FLAT WASHER
FT	FOOT
HHCS	HEX HEAD CAP SCREWS
HN	HEX NUT
IN	INCHES
KIP	1000 LBS
LBS	POUNDS
LPF	LOW PRY FITTING
LW	LOCK WASHER
MEP	MECHANICAL, ELECTRICAL AND PLUMBING
NPF	NO PRY-FITTING
NSB	NON STRUCTURAL SEISMIC BRACING

NONSTRUCTURAL ABBREVIATIONS

PLF	POUNDS PER LINEAL FOOT
PVC	POLY VINYL CHLORIDE CONDUIT
RMC	RIGID METAL CONDUIT
RCP	ROD COUPLER
RC	REINFORCED CONCRETE
RTU	ROOF TOP UNIT
SAF	STRUCTURAL ATTACHMENT FITTING
SCHED	SCHEDULE
UNO	UNLESS NOTED OTHERWISE
URC	UNIVERSAL RESTARAINING CLIP
VERT	VERTICAL
@	AT
>	GREATER TAHN
>=	GREATER TAHN OR EQUAL TO
<=	LESS TAHN
<	IESS THAN OR EQUAL TO
=	EQUAL
θ	DIAMETER

NOTES:
1. CONTEXT OF THE ABBREVIATIONS DETERMINES WHICH TERM IMPLIED. CONTACT ENGINEER OF RECORD FOR ADDITIONAL INFORMATION.
2. NOT ALL ABBREVIATIONS ARE USED IN DRAWINGS AND DETAILS

AGENCY APPROVAL

ARCH | NEXUS
Architectural NEXUS, Inc.
2505 East Parleys Way
Salt Lake City, UT 84109
T 801.924.5000
http://www.archnexus.com

Original drawings remain the property of the Architect and as such the Architect retains total ownership and control. The design represented by these drawings is sold to the client for a one time use, unless otherwise agreed upon in writing by the Architect.
© Architectural Nexus, Inc. 2019

LICENSED PROFESSIONAL ENGINEER
No. 9324712-2202
Timothy Paul Thurgood
STATE OF UTAH

UNIVERSITY OF UTAH
WILLIAMS BLDG TIER 3 NETWORK NODE INTERFACE REMODEL
UNIVERSITY OF UTAH RESEARCH PARK, CHIPETA WAY
SALT LAKE CITY, UT

#	Date	Revision

PERMIT SET

NEXUS PROJECT #: 20101
CHECKED BY: TPT
DRAWN BY: TPT
DATE: 04.13.2021

GSN & SPECIAL INSPECTION & SCHEDULES
S001

5/20/2021 5:27:30 PM

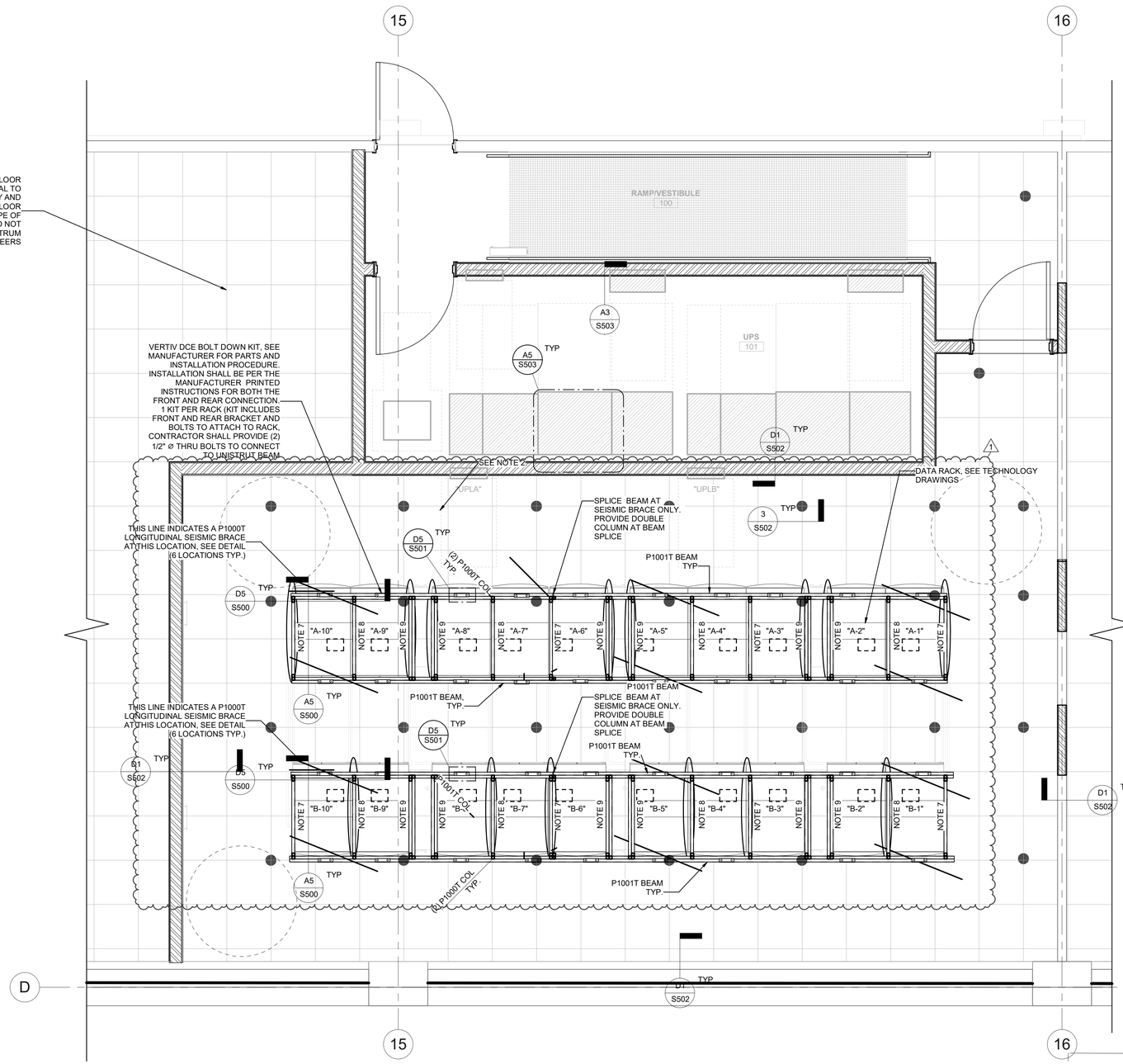

1 Raised Access Panel Floor
SCALE: NTS

GENERAL SHEET NOTES

1. DATA RACK BASIS OF DESIGN: VERITIV DCE45612 ;WEIGHT - 3000#: HEIGHT - 84"; LENGTH - 47"; DEPTH - 23" (UNITS ARE BAYED TOGETHER PER MANUFACTURER
2. BASIS OF DESIGN ASSUMES UNISTRUT P1000T AND P1001T 12 GA. GALVANIZED MEMBERS. CONTRACTOR MAY USE EQUAL STRUT MATERIAL PROVIDED EQUALOR GREATER DESIGN CAPACITY. SEE GSN FOR APPROVED EQUALOR SUBMIT ALTERNATE TO EOR

RAISED ACCESS FLOOR PLAN NOTES:

1. SEE TELECOM DRAWINGS FOR LAYOUT DIMENSIONS OF DATA RACK AND CABLE TRAY
2. CONTRACTOR SHALL VERIFY RACK LOCATION AND DIMENSIONS WITH TELECOM. CONTRACTOR SHALL VERIFY PLACEMENT OF THE RACKS WITH RAISED ACCESS PANEL LAYOUT AND GRAVITY SUPPORT PEDESTALS AND MEMBERS AS TO AVOID CONFLICTS.
3. ALL CONCRETE ANCHORS TO BE 1/2" Ø HILTI KWIK BOLT TZ2 ANCHORS WITH 2-1/2" MIN EMBEDMENT (MIN SLAB THICKNESS =5")
4. ALL SEISMIC BRACES TO BE INSTALLED AT 45° FROM HORIZONTAL +/- 5°
5. EXISTING DATA FLOOR SUPPORTS AND PEDESTALS TO REMAIN WHERE FEASIBLE. DEMO EXISTING FLOOR WHERE REQUIRED FOR INSTALL OF NEW WALLS ETC. SEE DETAILS ON PLAN FOR PUTBACK SUPPORT AT NEW WALL LOCATIONS. THE EXISITNG RAISED FLOOR SHALL BE CONNECTED TO THE EXISTING WALLS PER DETAILS PROVIDED. REPLACE MISSING AND/OR DAMAGED FLOOR IN KIND WITH NEW FLOOR PEDESTAL AND FRAME COMPATIBLE WITH THE EXISTING FLOOR. FOR BIDDING PURPOSES ASSUME 100 SQUARE FEET TO BE REPLACED AND PROBIDE PRICE PER SQUARE FOOT FOR ADDITIONAL FLOOR REPLACEMENT. MINIMUM RATED LIVE LOAD FOR NEW FLOOR SYSTEM SHALL BE 100PSF
6. ● THIS SYMBOL REPRESENTS FLOOR SEISMIC BRACING LOCATION. NOTE THE BRACE LOCATION SHOWN ON PLAN IS APPROXIMATE. CONTRACTOR MAY ALTER BRACE LOCATION WHERE CONFLICT WITH EXSITING OR NEW EQUIPMENT ARISES. SEISMIC BRACING OF THE RAISED FLOOR SHALL BE PROVIDED PER PLAN NOTES AND DETAIL. (1) SEISMIC BRACE IS REQUIRED FOR EVERY36 FT² OF FLOOR AREA
7. P1000T CROSS BEAM & P1000T SEISMIC BRACE
8. P1000T CROSS BEAM
9. P1001T CROSS BEAM AND P1000T SEISMIC BRACE
10. SERVER RACK 3000 LBS DESIGN LOAD
11. UPS BASIS OF DESIGN PARAMETERS. CONCTACT EOR IF FINAL SELECTED UNITS PARAMETERS ARE DIFFERNET
    WEIGHT = 2430#
    LENGTH= 60"
    DEPTH = 33"
    HEIGHT=79"

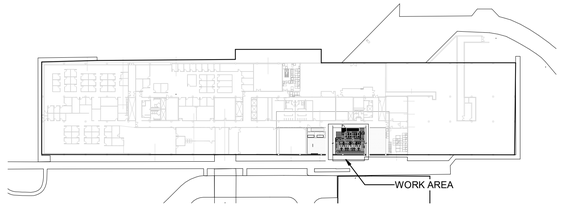

WORK AREA KEY DIAGRAM

ARCH | NEXUS
Architectural NEXUS, Inc.
2505 East Parleys Way
Salt Lake City, UT 84109
T 801.924.5000
http://www.archnexus.com

Original drawings remain the property of the Architect and as such the Architect retains total ownership and control. The design represented by these drawings is sold to the client for a one time use, unless otherwise agreed upon in writing by the Architect. © Architectural Nexus, Inc. 2019

LICENSED PROFESSIONAL ENGINEER
No. 9324712-2202
Timothy Paul Thurgood
STATE OF UTAH

UNIVERSITY OF UTAH
WILLIAMS BLDG TIER 3 NETWORK NODE INTERFACE REMODEL
UNIVERSITY OF UTAH RESEARCH PARK, CHIPETA WAY
SALT LAKE CITY, UT

#	Date	Revision
1	05.21.21	PERMIT REVIEW COMMENTS

PERMIT SET

NEXUS PROJECT #: 20101
CHECKED BY: TPT
DRAWN BY: TPT
DATE: 04.13.2021

AGENCY APPROVAL

BASEMENT DATA FLOOR PLAN

S100

5/20/2021 5:27:32 PM

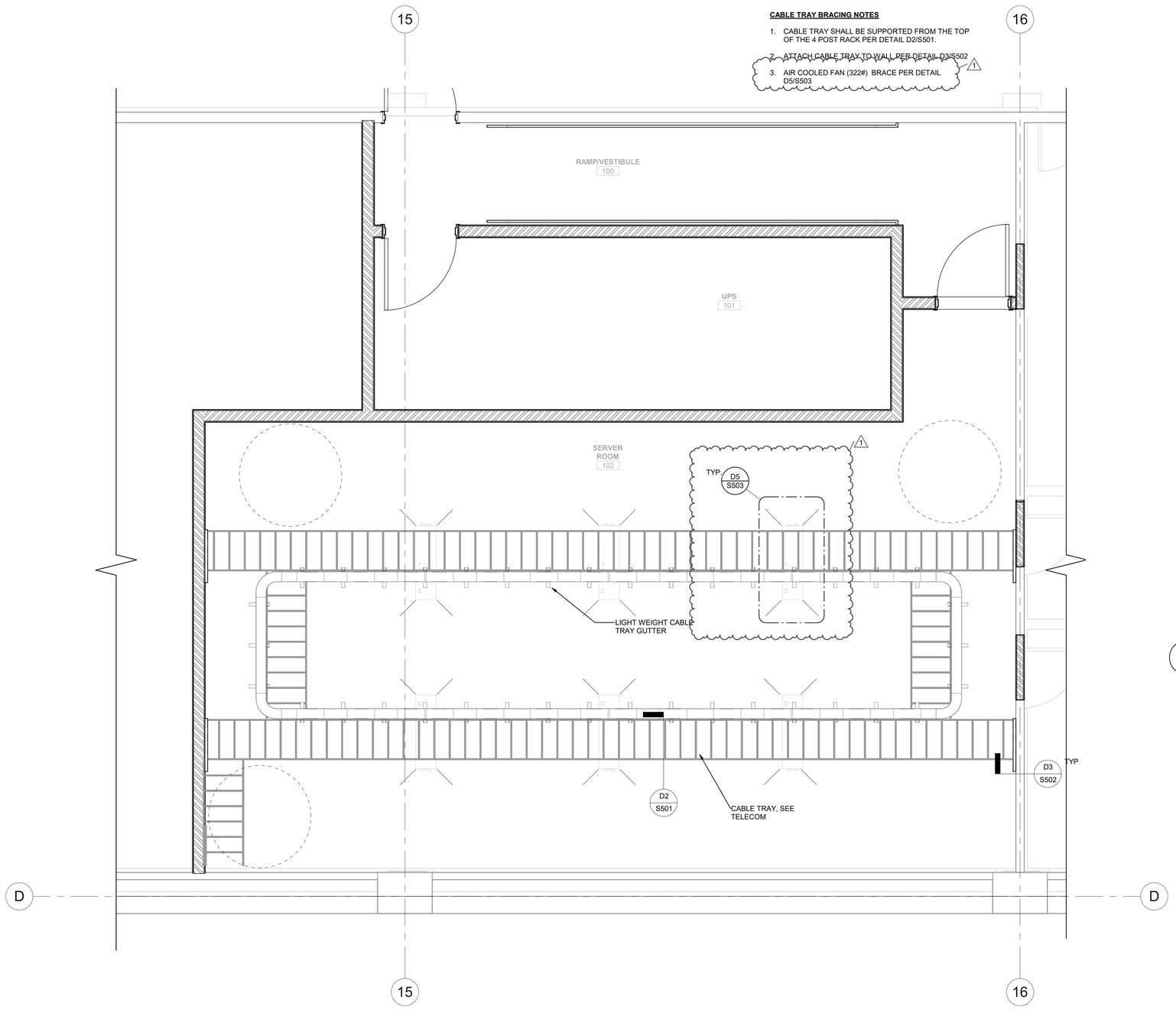

A5 Cable Tray
SCALE: NTS

GENERAL SHEET NOTES

1. CABLE TRAY BASIS OF DESIGN: CHATSWORTH LADDER RACK TRAY: WEIGHT-20 #/FT; WIDTH - 18"
2. BASIS OF DESIGN CHATSWORTH CABLE TRAY CONNECTION TO TOP OF RACK. INSTALL PER MANFUACTURERS RECOMMENDED ISNTALLATION PROCEDURE

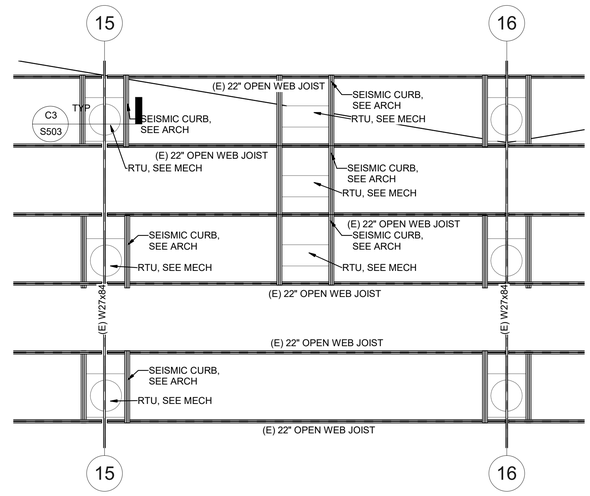

1 PARTIAL MECH. ROOF PLAN
SCALE: NTS

ARCH | NEXUS
Architectural NEXUS, Inc.
2505 East Parleys Way
Salt Lake City, UT 84109
T 801.924.5000
http://www.archnexus.com

Original drawings remain the property of the Architect and as such the Architect retains total ownership and control. The design represented by these drawings is sold to the client for a one time use, unless otherwise agreed upon in writing by the Architect. © Architectural Nexus, Inc. 2019

LICENSED PROFESSIONAL ENGINEER
No. 9324712-2202
Timothy Paul Thurgood
STATE OF UTAH

UNIVERSITY OF UTAH
WILLIAMS BLDG TIER 3 NETWORK NODE INTERFACE REMODEL
UNIVERSITY OF UTAH RESEARCH PARK, CHIPETA WAY
SALT LAKE CITY, UT

#	Date	Revision
1	05.21.21	PERMIT REVIEW COMMENTS

PERMIT SET

NEXUS PROJECT #: 20101
CHECKED BY: Checker
DRAWN BY: Author
DATE: 04.13.2021

AGENCY APPROVAL

CABLE TRAY PLAN & PARTIAL ROOF

S101

5/20/2021 5:27:33 PM

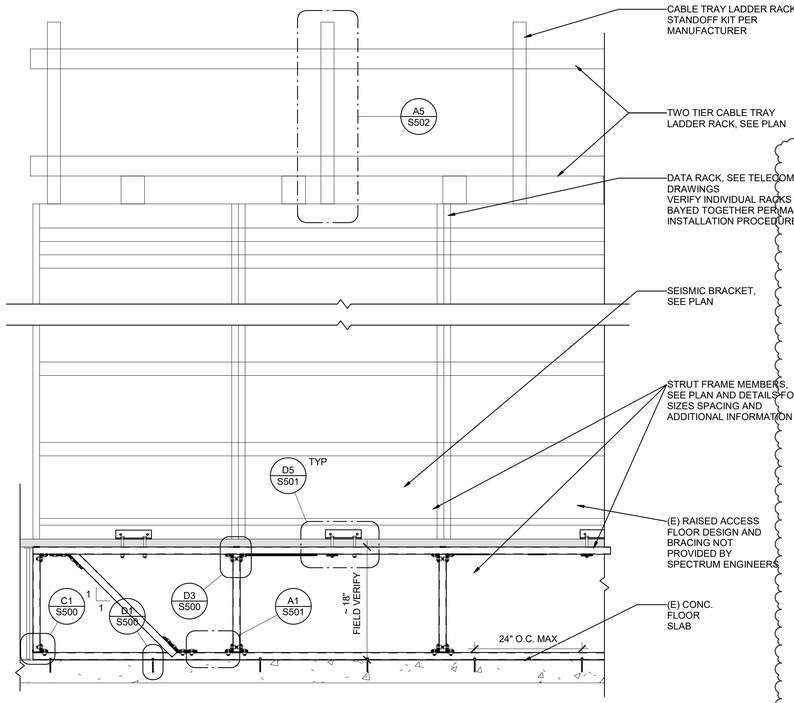

D5 4 POST RACK LONGITUDINAL VIEW
SCALE: NTS

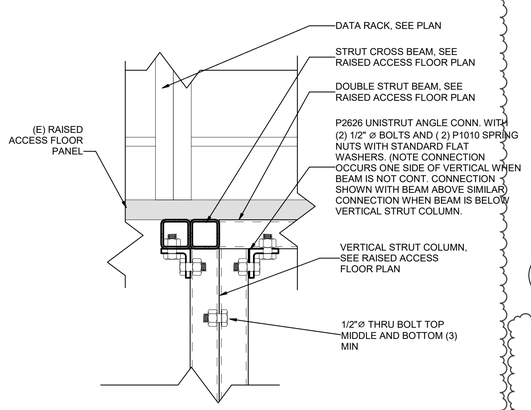

D3 VERT. COL. TO STRUT CONNECTION
SCALE: NTS

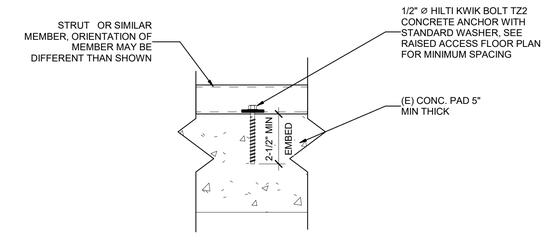

D1 CONC ANCHOR CONNECTION
SCALE: NTS

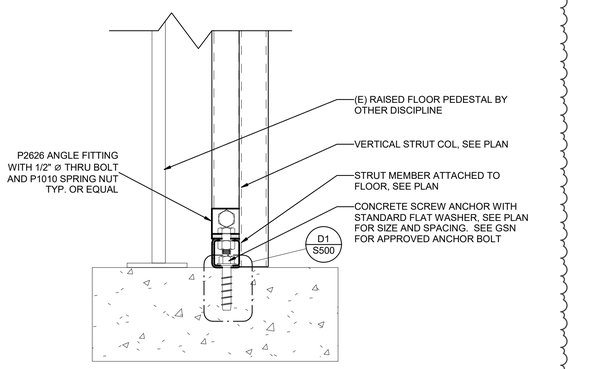

C1 STRUT TO CONC. CONNECTION
SCALE: NTS

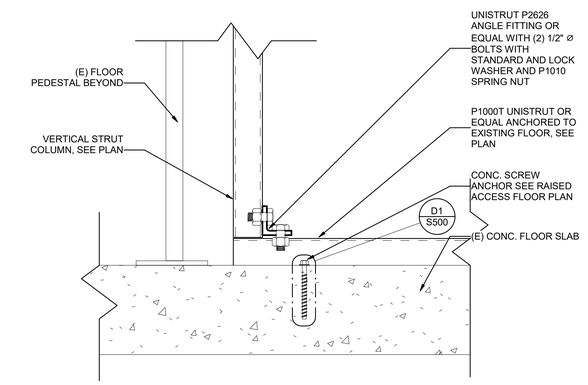

A1 STRUT TO STRUT CONN.
SCALE: NTS

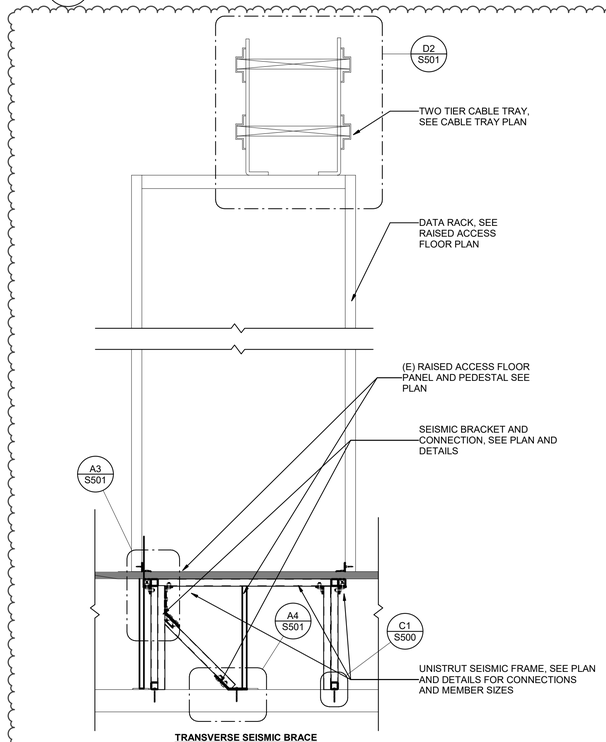

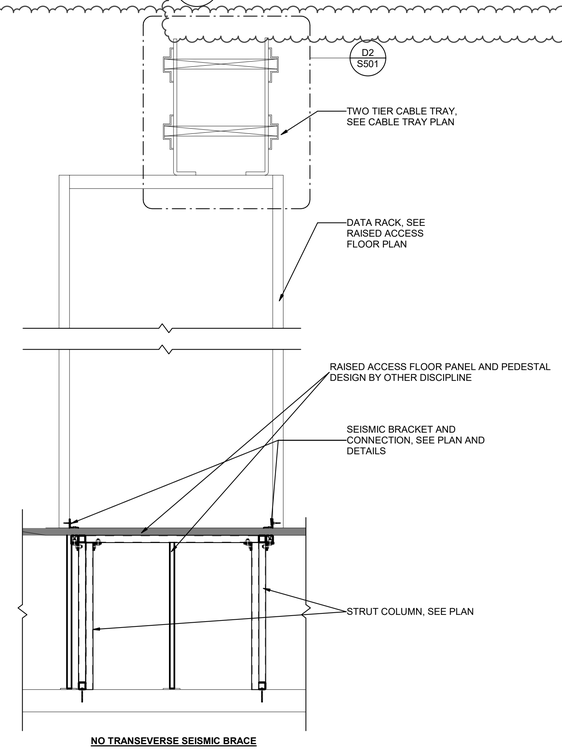

A5 4 POST RACK BRACE CROSS SECTION
SCALE: NTS

ARCH | NEXUS
Architectural NEXUS, Inc.
2505 East Parleys Way
Salt Lake City, UT 84109
T 801.924.5000
http://www.archnexus.com

Original drawings remain the property of the Architect and as such the Architect retains total ownership and control. The design represented by these drawings is sold to the client for a one time use, unless otherwise agreed upon in writing by the Architect.
© Architectural Nexus, Inc. 2019

LICENSED PROFESSIONAL ENGINEER
No. 9324712-2202
Timothy Paul Thurgood
STATE OF UTAH

UNIVERSITY OF UTAH
WILLIAMS BLDG TIER 3 NETWORK NODE INTERFACE REMODEL
UNIVERSITY OF UTAH RESEARCH PARK, CHIPETA WAY
SALT LAKE CITY, UT

#	Date	Revision
1	05.21.21	PERMIT REVIEW COMMENTS

PERMIT SET

NEXUS PROJECT #: 20101
CHECKED BY: Checker
DRAWN BY: Author
DATE: 04.13.2021

AGENCY APPROVAL

DETAILS

S500

5/20/2021 5:27:34 PM

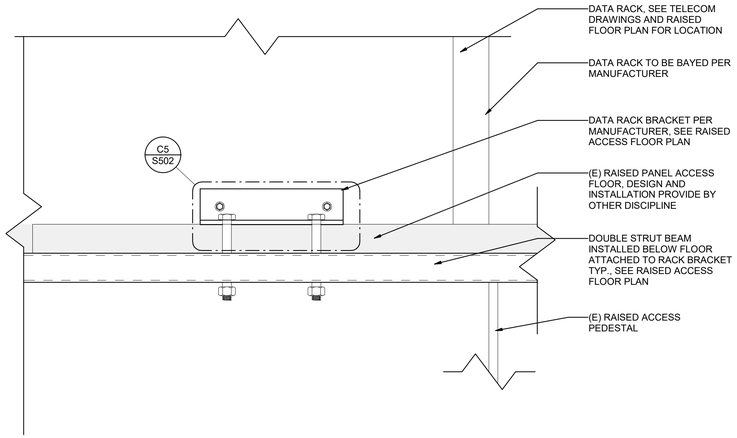

D5 BRACKET TO STRUT CONNECTION
SCALE: NTS

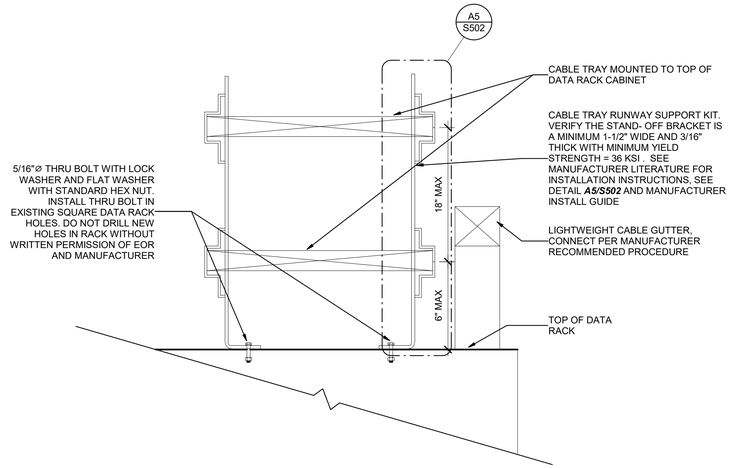

D2 CABLE TRAY TO RACK CONN.
SCALE: NTS

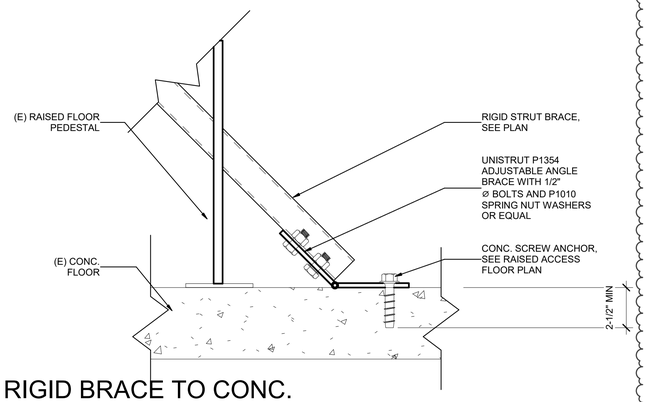

A4 RIGID BRACE TO CONC. CONNECTION
SCALE: NTS

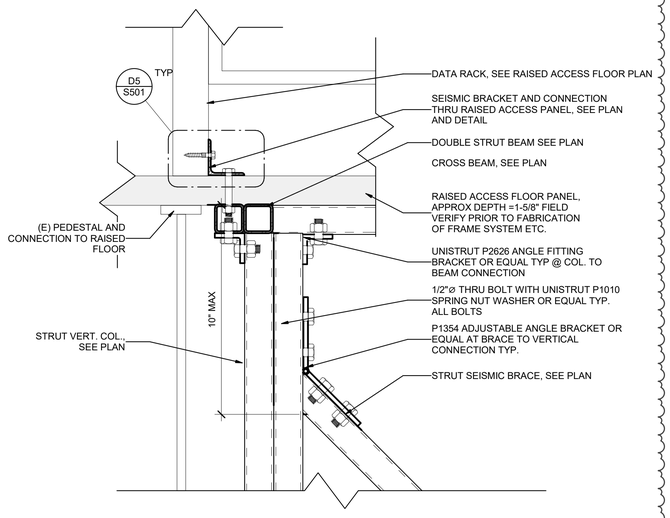

A3 RIGID SEISMIC BRACING CONNECTION
SCALE: NTS

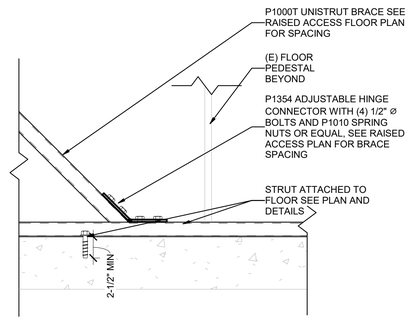

A1 DIAGONAL BRACE CONNECTION
SCALE: NTS

AGENCY APPROVAL

5/20/2021 5:27:34 PM

ARCH | NEXUS
Architectural NEXUS, Inc.
2505 East Parleys Way
Salt Lake City, UT 84109
T 801.924.5000
http://www.archnexus.com

Original drawings remain the property of the Architect and as such the Architect retains total ownership and control. The design represented by these drawings is sold to the client for a one time use, unless otherwise agreed upon in writing by the Architect.
© Architectural Nexus, Inc. 2019

LICENSED PROFESSIONAL ENGINEER
No. 9324712-2202
Timothy Paul Thurgood
STATE OF UTAH

UNIVERSITY OF UTAH
WILLIAMS BLDG TIER 3 NETWORK NODE INTERFACE REMODEL
UNIVERSITY OF UTAH RESEARCH PARK, CHIPETA WAY
SALT LAKE CITY, UT

#	Date	Revision
1	05.21.21	PERMIT REVIEW COMMENTS

PERMIT SET

NEXUS PROJECT #: 20101
CHECKED BY: Checker
DRAWN BY: Author
DATE: 04.13.2021

DETAILS

S501

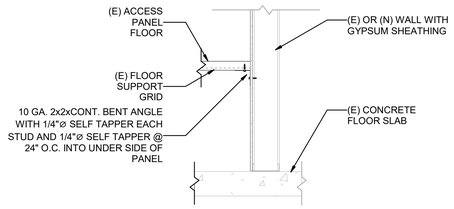

D1 RAISED ACCESS FLOOR TO WALL CONNECTION

SCALE: NTS

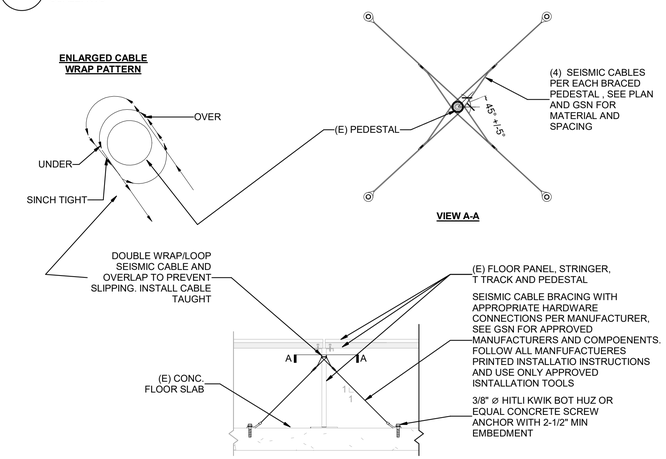

3 FLOOR PEDESTAL SEISMIC BRACE

SCALE: NTS

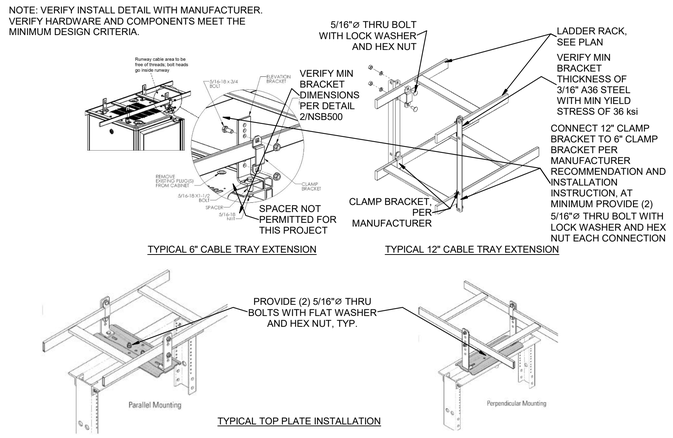

A5 CABLE TRAY CONN. TO RACK

SCALE: NTS

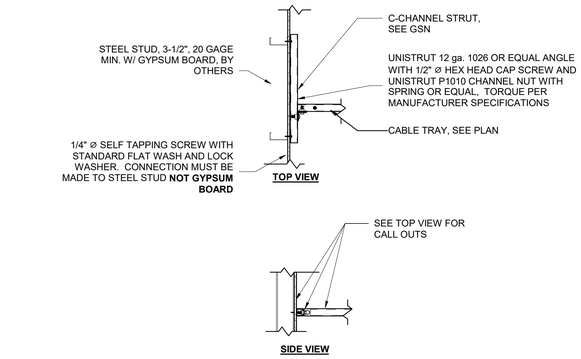

D3 CABLE TRAY TO WALL CONNECTION

SCALE: NTS

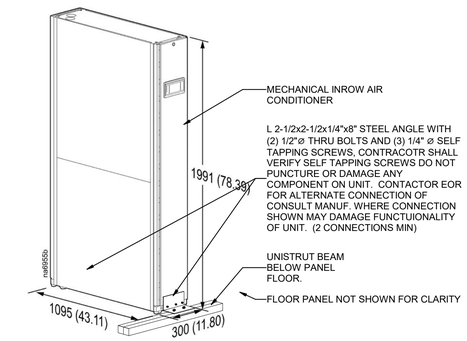

C3 ACRD INROW AIR CONDITIONER

SCALE: NTS

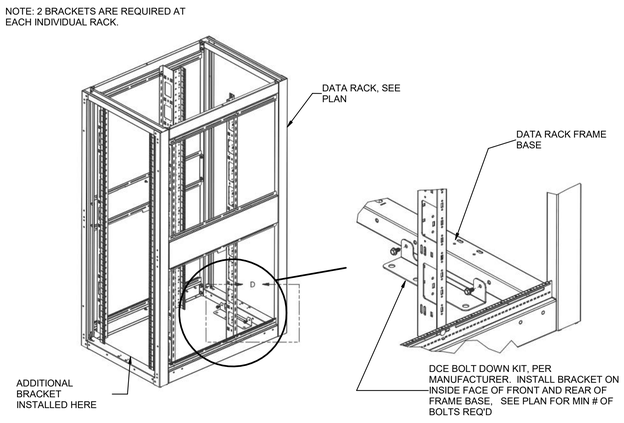

C5 DATA RACK INTERNAL BRACKET

SCALE: NTS

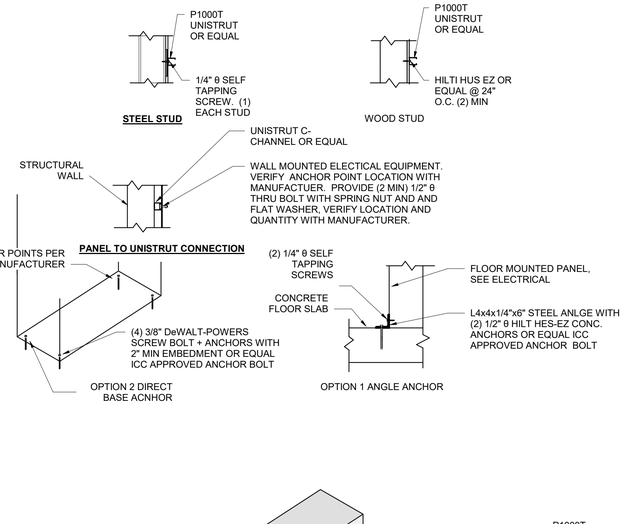

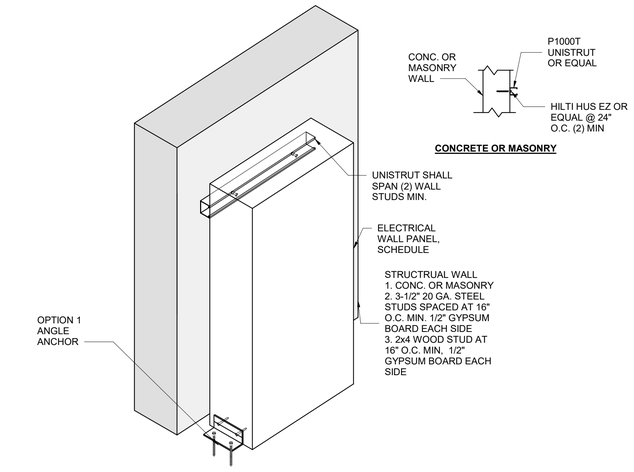

1 WALL/FLR MOUNT ELECTRICAL PANEL

SCALE: NTS

AGENCY APPROVAL

ARCH | NEXUS

Architectural NEXUS, Inc.
2505 East Parleys Way
Salt Lake City, UT 84109
T 801.924.5000
http://www.archnexus.com

Original drawings remain the property of the Architect and as such the Architect retains total ownership and control. The design represented by these drawings is sold to the client for a one time use, unless otherwise agreed upon in writing by the Architect. © Architectural Nexus, Inc. 2019

UNIVERSITY OF UTAH
WILLIAMS BLDG TIER 3 NETWORK NODE INTERFACE REMODEL
UNIVERSITY OF UTAH RESEARCH PARK, CHIPETA WAY SALT LAKE CITY, UT

#	Date	Revision

PERMIT SET

NEXUS PROJECT #: 20101
CHECKED BY: TPT
DRAWN BY: TPT
DATE: 04.13.2021

DETAILS

S502

5/20/2021 5:27:35 PM

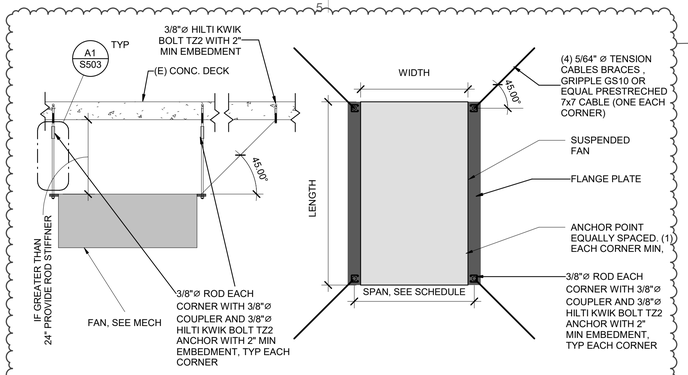

D5 SUSPENDED FAN BRACING

SCALE: NTS

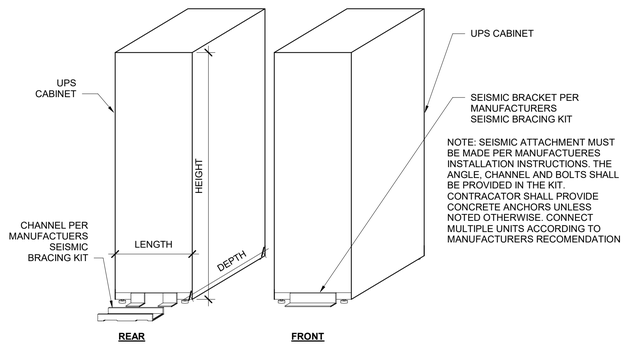

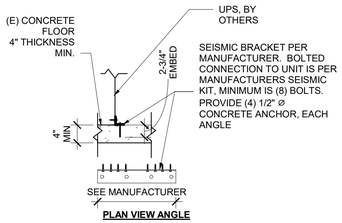

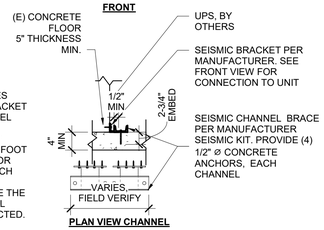

NOTE:

WHERE MANUFACTUER DOES NOTE PROVIDE SEISMIC BRACKET CONTRACOTR MAY USE STEEL AGNLE AND SELF TAPPING SCREWS. ALTERNAIVELY IF MANUFACUTRER PROVIDES FOOT FOR MOUNTING CONTRACTOR MAY INSTALL ANCHOR IN EACH BOLT LOCATION PROVIDED. CONTACT EOR AND PROVIDE THE FOLLOWING TO VERIFY FINAL DESING AFTER UPS IS SELECTED.

WEIGHT
HEIGHT
LENGTH
WIDTH/DEPTH

A5 UPS Floor connection

SCALE: NTS

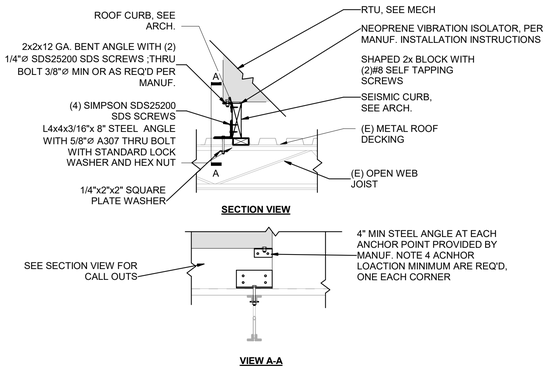

C3 RTU ROOF CONNECTION

SCALE: NTS

BASIS OF DESIGN
L=36"
h=48"
D=10"
W=500#

NOTE:
PANELS WITH ANY VALUE THAT EXCEEDS BASIS OF DESIGN MAY REQUIRE ADDITIONAL CONNECTORS CONTACT EOR.

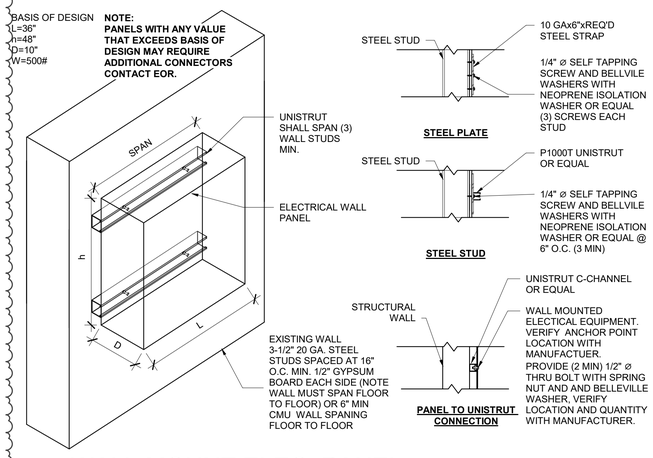

A3 WALL MOUNT ELEC. PANEL

SCALE: NTS

OPTION A

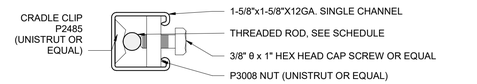

OPTION B

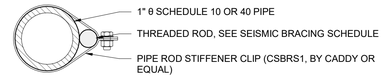

OPTION C

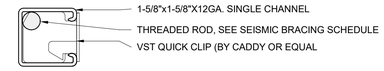

OPTION D

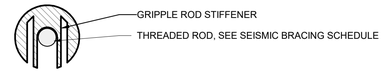

NOTES:

1. SPACING OF CONNECTORS PER DISTRIBUTION BRACING SCHEDULE UNLESS NOTED OTHERWISE NSB002
2. ANY OF THESE OPTIONS ARE ACCEPTABLE FOR PROVIDING LATERAL SUPPORT TO THREADED RODS. IF ALTERNATE DETAIL IS DESIRED SUBMIT REQUEST TO ENGINEER OF RECORD FOR APPROVAL
3. GRIPPLE ROD STIFFENER MAXIMUM LENGTH OF BRACED ROD SHALL NOT EXCEED 48"

C1 HANGER ROD STIFFENER OPTIONS

SCALE: NTS

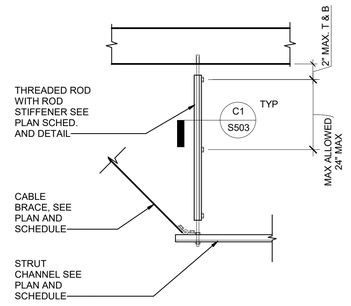

A1 HANGER ROD STIFFENERS @ BRACING

SCALE: NTS

AGENCY APPROVAL

ARCH | NEXUS

Architectural NEXUS, Inc.
2505 East Parleys Way
Salt Lake City, UT 84109
T 801.924.5000
http://www.archnexus.com

Original drawings remain the property of the Architect and as such the Architect retains total ownership and control. The design represented by these drawings is sold to the client for a one time use, unless otherwise agreed upon in writing by the Architect. © Architectural Nexus, Inc. 2019

LICENSED PROFESSIONAL ENGINEER
No. 9324712-2202
Timothy Paul Thurgood
STATE OF UTAH

UNIVERSITY OF UTAH
WILLIAMS BLDG TIER 3 NETWORK NODE INTERFACE REMODEL
UNIVERSITY OF UTAH RESEARCH PARK, CHIPETA WAY
SALT LAKE CITY, UT

#	Date	Revision
1	05.21.21	PERMIT REVIEW COMMENTS

PERMIT SET

NEXUS PROJECT #: 20101
CHECKED BY: Checker
DRAWN BY: Author
DATE: 04.13.2021

DETAILS

S503

5/20/2021 5:27:36 PM